POLYMELT

Made in Germany

Technical manual

PP-R Pipe system for hot & cold potable water

ECOSAN

TABLE OF CONTENTS

System description
1.1 ECOSAN Installation system 6
1.1.1 System components 6
1.1.2 Material-related guide values of PP-R/PP-RC 6
1.1.3 Fields of application 7
1.1.4 Possible uses 7
1.2 ECOSAN Pipes 8
1.2.1 Overview 8
1.2.2 ECOSAN 9
1.2.3 ECOSAN ML5 10
1.2.4 UV ML5 12
1.2.5 Pipe labelling 14
1.3 Product line 15
1.3.1 ECOSAN Pipes 15
1.3.2 ECOSAN Fittings 17
1.3.3 ECOSAN Adapters 24
1.3.4 ECOSAN Fittings and accessories 26
1.3.5 ECOSAN Shut-off devices and accessories 28

Transportation and storage
2.1 Safety instructions and intended use 36

Drinking water hygiene
3.1 Drinking water 37
3.2 Types of installation 38
3.2.1 Connection of drinking water tapping points 38
3.2.2 Fittings for hygienic piping 39

System requirements
4.1 Standards and regulations 40
4.1.1 Planning of drinking water installation systems 40
4.1.2 System-specific standards 40
4.2 Terms used 41
4.2.1 Standard dimension ratio 41
4.2.2 Pipe series number S 41
4.2.3 Nominal pressure (PN) 41
4.3 Requirements on pipe systems 42
4.3.1 Classification of operational conditions 42
4.3.2 Table of working pressure is exposed 43
4.3.3 Stress that a pipe system is exposed 44
4.4 Chemical resistance 45
4.5 Disinfection 46
4.5.1 Thermal disinfection 46
4.5.2 Chemical disinfection – "Shock disinfection" 47
4.5.3 Continuous metered addition of chemicals – "Permanent disinfection" 47

TABLE OF CONTENTS

Planning and design
5.1 Dimensioning of drinking water systems ... 48
5.1.1 Differentiating calculation procedure ... 48
5.1.2 Minimum flow pressures of tapping points ... 49
5.1.3 Peak flow rate according to DIN 1988 ... 50
5.1.4 Single resistance values z ... 52
5.1.5 Pressure loss tables ... 53
5.2 Simplified procedure ... 64

Welding technology
6.1 Basic information ... 67
6.1.1 Socket welding using a heated tool ... 67
6.1.2 Guidelines ... 67
6.2 Processing information for welding ... 68
6.2.1 Socket welding with a hand-held welding device, from 20 mm ... 69
6.2.2 Socket welding with a stationary welding machine, from 40 mm ... 70
6.2.3 Welding saddle for 40–250 mm ... 71
6.2.4 Repair plugs ... 72
6.2.5 Use of electric welding sockets ... 73
6.2.6 Butt welding machine for 160 mm and above ... 75

Assembly guidelines
7.1 Fastening techniques ... 76
7.1.1 Fixed points ... 76
7.1.2 Sliding points ... 76
7.2 Mounting distances ... 77
7.3 Laying the pipes ... 78
7.4 Length variation ... 79
7.5 Thermal expansion force ... 81
7.6 Expansion compensation ... 82
7.6.1 Bending legs ... 82
7.6.2 Expansion loop ... 83
7.6.3 Pre-tensioning ... 83
7.7 Insulation ... 84
7.7.1 Hot water insulation ... 84
7.7.2 Cold water insulation ... 85
7.7.3 Dew point ... 85
7.8 Noise protection ... 87
7.9 Fire protection ... 88

TABLE OF CONTENTS

Initial operation
8.1 Pressure-tests 89
8.2 Flushing the system 92
8.3 Initial operation 92

Quality management
9.1 Quality assurance 94
9.1.1 Approvals 96
9.1.2 Testing institutes for product monitoring and certification 96
9.4 Sustainability 97

General information

The information provided in this technical manual is intended to help you select our products for your application. Text and images were compiled with utmost care. Nevertheless, errors cannot be entirely excluded. POLYMELT does not assume legal liability or any other form of liability for erroneous information and its consequences. POLYMELT is grateful for any suggestions or comments.

We are happy to provide further information – please contact the POLYMELT Sales Office:
+49 8342 70060, mail@polymelt.com

1.1 ECOSAN Installation system

The ECOSAN installation system consists of various pipes designed for various fields of application and guarantees a flawless supply of the most precious of all comestibles: drinking water.

Connection Technique using Heated-Tool Socket Welding
When the pipe and the fitting are welded, their plastic materials fuse together to form a homogeneous, firmly bonded whole. Special tools are used to heat up pipe and fitting, which are then just joined together. This connection is reliable and lastingly leakproof.

1.1.1 System components

1.1.1.1 Fittings

The PP-R-metal connection of the ECOSAN fittings excels by its leakproofness and resistance to torsion. This connection withstands decades of operational loads without any difficulty. Thanks to the specific geometry of their inserts, which are made of high-grade brass, the moulded parts meet the highest safety standards and guarantee safe laying.

The metal threads of the POLYMELT brass components meet the requirements of the DIN EN 10226 standard and are manufactured from high-quality brass. Moreover, the material complies with the current version of the recommendations (as at 2014) of the Federal Environment Agency on "Materials suitable from a drinking water hygiene point of view". This guarantees that the limit values of the "Deutsche Trinkwasserverordnung (TrinkwV 2001)" (German Drinking Water Ordinance) are reliably observed. All ECOSAN fittings are compatible with all ECOSAN pipes (refer to page 8 and following).

1.1.1.2 Pipes and fittings

All pipes and fittings of the ECOSAN installation system are made of PP-R, with only high-quality raw materials being used. This raw material is equipped with high-grade stabilizers. The stabilizer package protects the polymer from oxidation, which may occur, for example, following long-term exposure to high temperatures > 70 °C and high pressure.

1.1.2 Technical properties PP-R/PP-RCT

Properties	Measuring method	Unit	Value
Density	ISO 1183	g/cm³	0,9
Melt flow rate 230 °C/2.16 kg	ISO 1133	g/10 min.	0.3
Modulus of elasticity in tension (1 mm/min.)	ISO 527	MPa	900
Tensile stress at yield (50 mm/min.)	ISO 527	MPa	25-28
Charpy impact strength, notched (+23 °C)	ISO 179	kJ/m²	25-40
Material thermal conductivity	DIN 52612	W/mK	0.24
Thermal conductivity tested on the product	ISO22007	W/mK	0.15
Pipe surface roughness k		mm	0.007
Specific heat at 20 °C	Calorimeter	KJ/kg K	2.0

1.1.3 Fields of application

For more than 30 years, polypropylene has been successfully used in supply lines of buildings in many countries worldwide. The combination of such excellent properties as chemical resistance, homogeneous connection, resistance to pressure and easy laying make it a reliable and lasting system suitable for various applications. In many countries it is gradually replacing such traditional materials as copper and galvanized steel.

Properties of ECOSAN

- **Enormous durability thanks to high-quality materials and processing**
- **Homogeneous connection guarantees high operational reliability.**
- **High demands for hygiene guarantee perfect water quality.**
- **Good thermal load capacity, therefore high operational reliability.**
- **High chemical resistance guarantees high durability.**
- **Minor flow noise makes living highly comfortable.**
- **High dimensional accuracy and low weight, therefore time- and cost-saving pipe laying.**

1.1.4 Possible uses

The ECOSAN installation system fulfils a variety of demands made on supply lines. It is suitable for universal use in:
- **New buildings**
- **Refurbishment**
- **Repairs;**

in **drinking water installations** for cold and hot water pipes in residential buildings, hospitals, hotels, office buildings, schools, etc., for example:
- **Service connections**
- **Boiler connections**
- **Water distributing systems**
- **Rising lines**
- **Floor-level distribution**
- **Fittings**

as well as **piping networks** for:
- **Rainwater systems**
- **Outside pipe laying**

- **Compressed air systems**
- **Agriculture and horticulture**
- **Industries, for example the transportation of aggressive media (acids, alkaline solutions, etc.), taking into account its resistance to chemical agents**
- **Heating installations**
- **Shipbuilding**
- **Further media and possible applications upon request.**

ECOSAN is not suitable for:
- **Industrial gases**
- **Flammable liquids and gases**
- **Coolants/refrigerants**

1.2 ECOSAN Pipes

1.2.1 Overview

ECOSAN, the high-grade installation pipe made of polypropylene, **ECOSAN ML5 and UV ML5,** the multilayer fibre-reinforced composite pipes, guarantee reliable, durable and flawless supply in installation systems.

Wall thickness, pipe material and temperature range are the factors that decide the level of the resistance of a plastic pipe system to pressure.

POLYMELT pipes are available in various wall thicknesses:

				ECOSAN pipes												
	SDR	Type	Material	20	25	32	40	50	63	75	90	110	125	160	200	250
ECOSAN	6	Single Layer	PP-R													
ECOSAN	7,4	Single Layer	PP-R													
ECOSAN	11	Single Layer	PP-R													
ECOSAN ML5	7,4	Multi Layer fiber	PP-R													
ECOSAN ML5	7,4	Multi Layer fiber	PP-RCT													
ECOSAN ML5	9	Multi Layer fiber	PP-RCT													
ECOSAN ML5	11	Multi Layer fiber	PP-RCT													
UV ML5	7,4	Multi Layer fiber	PP-R													

Pipes 20 - 125 mm = socket welding

Pipes 160 - 250 mm = butt welding

POLYMELT pipes made of PP-R and PP-RCT are manufactured according to DIN EN ISO 15874, EN ISO 21003 and DIN 8077/78 and fulfil their quality requirements.

1.2.2 Technical datas

		ECOSAN							UV
		Single layer	Single layer	Single layer	Fiber ML 5	Fiber ML 5	Fiber ML 5	Fiber ML 5	Fiber ML 5
Material		PP-R	PP-R	PP-R	PP-R	PP-RCT	PP-RCT	PP-RCT	PP-R
Pipe Series		SDR 11 / S 5	SDR 6 / S 2,5	SDR 7,4 / S3,2	SDR 7,4 / S 3,2	SDR 7,4 / S 3,2	SDR 9 / S 4	SDR 11 / S 5	SDR 7,4 / S 3,2
Diameter in mm		20-125	20-125	20-125	20-250	20-250	32-125	125-250	20-110*
Admissible Working pressure acc. DIN 8077, SF1,25	20°C	15,5 bar	30,9 bar	24,5 bar	24,5 bar	26,7 bar	23,1 bar	17,1 bar	24,5 bar
	70°C	5,1 bar	10,2 bar	8,1 bar	8,1 bar	11,2 bar	10,2 bar	7,2 bar	8,1 bar
Coefficient of linear expansion		0,15 mm / mK	0,15 mm / mK	0,15 mm / mK	0,035 mm / mK	0,035 mm / mK	0,035 mm / mK	0,035 mm / mK	0,035 mm / mK
Product standard		DIN 8077/8078, EN ISO 15874, ASTM2389							
Fire behaviour DIN 4102		B2							
Fire Behaviour EN13501		E							
Thermal Conductivity tested on product		0,15 W m/K							
Connection Technology		According DVS 2207/11 by socket, butt and electro fusion							
Special properties					Innovative 5 – Layer fiber pipe with increased stability and low length elongation. Two layers with fiber reinforcement provides excellent properties such as reduced linear expansion, deformation and excellent stability. 75% reduction in linear expansion..				
									First layer with UV protection by special stabilised PP-R

* Larger dimensions upon request.

1.2.3 ECOSAN ML5

The ECOSAN ML5 pipe represents a milestone in PP-R development. A 5 layer fiber pipe available with PP-R and PP RCT material.

1.2.3.1 Properties of the material

The ML5 pipe is available with the well known PP-R grade. Also the ML5 pipe made of PP-RCT is available which offers increased perfomances:
PP-RCT: Polypropylene random copolymer with modified crystalline structure and increased resistance to elevated temperatures. This material represents a new generation of the tried and tested PP-R material.
Especially with higher temperatures, the increased crystallinity of PP-RCT provides an improved creep-depending-on-time behaviour under internal compression.
PP = polypropylene
R = random
C = crystallinity
T = temperature

This is why pipes made from this material can have thinner walls and consequently larger inner diameters. Designers and plumbers are offered convincing advantages from this circumstance. Thanks to the larger inner diameter, the hydraulic capacity of the pipes increases, which is specifically advantageous in systems that need to transport large amounts of water, for example in high-rise buildings.

Pipes made of PP-RCT are accepted according to the EN ISO 15874 standard and the EN ISO 21003 standard on multilayer pipes, and represent the state of the art. The same well-tried connection technique is used for pipes and fittings made of PP-RCT as for PP-R pipes.

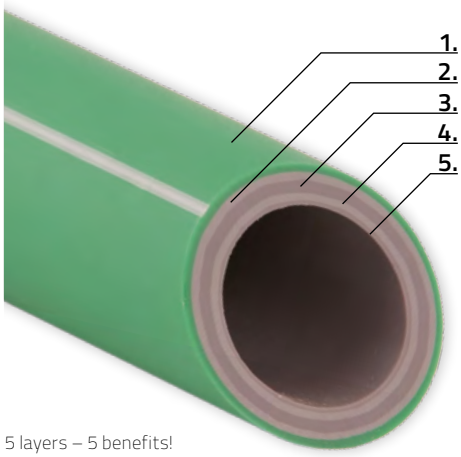

5 layers – 5 benefits!

Quality – made in Germany.

Distribution of layers

1. Layer PP-R / PP-RCT
2. Layer PP-R / PP-RCT with fiber reinforcement
The perfect connection of glass fibre and PP-R / PP-RCT provides excellent linear expansion, deformation properties as well as good resistance to impact loads.
3. Layer PP-R / PP-RCT
4. Layer PP-R / PP-RCT with fiber reinforcement
The two separate fiber layers offers a perfect stability and therefore a easier installation of the pipe
5. Layer PP-R / PP-RCT

1.2.3.3 Advantages

- **Lower linear expansion reduced by 75 % as compared to a PP-R standard pipe**
- **Improved resistance to internal pressure at increased temperatures as compared to a PP-R standard pipe, thanks to the PP-RCT material**
- **Increased stability allows longer distances between the fastening points**
- **Increased flow rate increased by approximately 16 % thanks to thinner walls at unchanged dimension and pressure strain**
- **Higher resistance to impact loads – special compound materials increase the resistance to impact loads**

1.2.3.5 Comparison of linear expansion

This comparison distinctly shows the linear expansion caused by temperature changes of a standard PP-R pipe and the ECOSAN ML5 pipe.
Linear expansion reduces by 75 %.

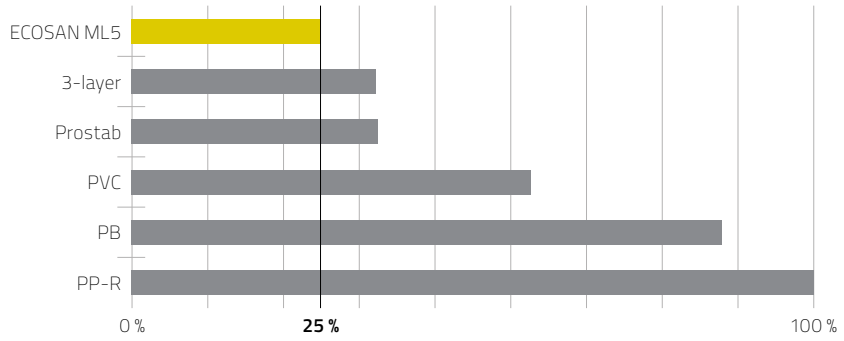

Comparison of linear expansion values

SYSTEM DESCRIPTION

1.2.4 UV ML5

The UV ML5 pipe is a further development of the ML5 pipe series.

1.2.4.1 Properties of the material

The pipe structure has been adopted from the ECOSAN ML5 pipe, only the exterior layer has been modified. Thanks to this UV resistant layer, this pipe is particularly suitable for laying of supply lines in outdoor areas, for example, in drinking water systems, irrigation systems, heating and cooling water systems.

Distribution of layers

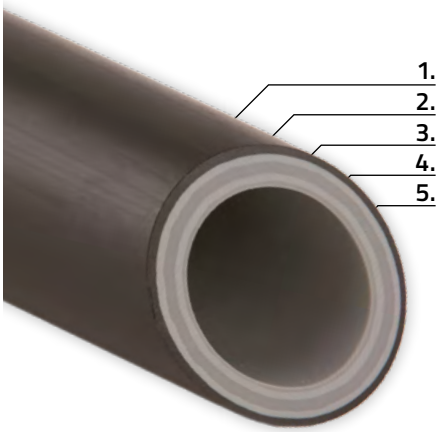

1. Layer PP-R
First layer with UV protection by special stabilised PP-R proven by a third party company
2. Layer PP-R with fiber reinforcement
The perfect connection of glass fibre and PP-R / PP-RCT provides excellent linear expansion, deformation properties as well as good resistance to impact loads.
3. Layer PP-R
4. Layer PP-R with fiber reinforcement
The two separate fiber layers offers a perfect stability and therefore a easier installation of the pipe
5. Layer PP-R

Processing

The pipes are installed using the existing fittings programme, without any additional operations.
The UV ML5 pipe can be welded directly, with no need of peeling off the outer layer.
Thus, pipes and fittings can be installed in the usual simple and safe way.

In Combination with our special range of UV resistant black fittings we can offer a full system solution for any kind of outdoor application.

Please find more informations about our UV ML 5 pipe series and accessories on our website.

1.2.4.4 Advantages

- **10 years of warranty on resistance to UV radiation has been confirmed by a third party**
- **No additional operations required – usual and safe homogeneous welding of pipe and moulded part**
- **Low linear expansion – reduced by 75 % as compared to a PP-R standard pipe**
- **Increased stability allows longer distances between the fastening points**
- **Increased flow rate – increased by approximately 16 % thanks to thinner walls, with the dimensions and the pressure strain remaining unchanged.**
- **Higher resistance to impact loads – special compound materials increase the resistance to impact loads**

1.2.4.5 Examined Resistance to UV Radiation

The resistance of the UV ML5 pipe to UV radiation has been tested by an acknowledged testing laboratory. During the entire test period samples were taken at certain intervals, which were then subjected to strength tests to examine them for possible changes of the material's mechanical properties. At the same time, material stability tests were carried out on a regular basis. The radiation intensity used for these tests was the same as in Aswan / Egypt over a period of more than 10 years.

UV-RESISTANT

1.2.5 Pipe labelling

Outer diameter × wall thickness	25 × 4.2
Product name	ECOSAN
Designation of material	PP-R
SDR wall thickness ratio	SDR 6
Pipe series S	S 2.5
Dimensional class according to EN ISO 15874	A
Class of application and admissible operational pressure according to EN ISO 15874	Class 1/10 bar, Class 2/8 bar
Working pressure	20 bar/20C, 10 bar/70C
Suitability for drinking water	TW
Impermeability to light	opaque
Product standards	DIN 8077/8078, EN ISO 15874
Certificates, approvals	SKZ A 553
Material labelling	Material
Machine number	Machine
Date of manufacture	DAY MONTH YEAR HOUR:MINUTE
Manufacturer	POLYMELT

Polymelt pipes are labled according the standards. An example of an pipe description and the meaning of the values are describet below:

Imprint and order:
25 × 4.2 **ECOSAN MADE IN GERMANY**
PP-R SDR 6/S 2.5 A Class 1/10 bar Class 2/8 bar 20 bar/20C 10 bar/70C TW opaque
DIN 8077/78 EN ISO 15874 SKZ A 553 Material Machine Day Month Year Hour:Minute

1.3 Product line

1.3.1 ECOSAN Pipes

Pipe SDR 6 / S 2.5 PP-R
for hot and cold water acc. to DIN 8077/78 and EN ISO 15874, class 1/10 bar, class 2/8 bar, 70°/10 bar, 20°/30 bar, DVGW CS0357 WRAS 1910531 and SKZ certificate A 553, colour green with red line

A. no.	Outer Ø mm	Wall thickness mm	Inner Ø mm	DN	Water Content l/m	Weight kg/m	Packing unit parcel/bar	Avai-labili-ty
16002	20	3.4	13.2	12	0.137	0.172	100 m / 4 m	S
16003	25	4.2	16.6	15	0.216	0.266	60 m / 4 m	S
16004	32	5.4	21.2	20	0.353	0.434	40 m / 4 m	S
16005	40	6.7	26.6	25	0.556	0.671	20 m / 4 m	S
16006	50	8.3	33.4	32	0.866	1.040	20 m / 4 m	S
16007	63	10.5	42.0	40	1.385	1.650	12 m / 4 m	S
16008	75	12.5	50.0	50	1.936	2.340	8 m / 4 m	S
16009	90	15.0	60.0	-	2.827	3.360	4 m / 4 m	S
16010	110	18.3	73.4	65	4.208	5.010	4 m / 4 m	S
16011	125	20.8	83.4	80	5.440	6.471	4 m / 4 m	S

SYSTEM DESCRIPTION

Pipe SDR 7.4 / S 3.2 PP-R
for hot and cold water acc. to DIN 8077/78 and EN ISO 15874, class 1/8 bar, class 2/8 bar, 70°/11 bar, 20°/25 bar WRAS 1910531, SKZ certificate A 634, colour green with black line

A. no.	Outer Ø mm	Wall thickness mm	Inner Ø mm	DN	Water Content l/m	Weight kg/m	Packing unit parcel/bar	Avai-labili-ty
16302	20	2.8	14.4	15	0.16	0.15	100 m / 4 m	S
16303	25	3.5	18.0	20	0.25	0.23	60 m / 4 m	S
16304	32	4.4	23.2	25	0.42	0.37	40 m / 4 m	S
16305	40	5.5	29.0	32	0.66	0.58	20 m / 4 m	S
16306	50	6.9	36.2	40	1.03	0.90	20 m / 4 m	S
16307	63	8.6	45.8	50	1.65	1.42	12 m / 4 m	S
16308	75	10.3	54.4	50	2.32	2.02	8 m / 4 m	S
16309	90	12.3	65.4	65	3.36	2.88	4 m / 4 m	S
16310	110	15.1	79.8	80	5.00	4.31	4 m / 4 m	S
16311	125	17.1	90.8	100	6.48	5.53	4 m / 4 m	S

Pipe SDR 11 / S 5 PP-R
for hot and cold water acc. to DIN 8077/78 and EN ISO 15874, class 1/6 bar, class 2/4 bar, 70°/5 bar, 20°/15 bar, colour green with blue line

A. no.	Outer Ø mm	Wall thickness mm	Inner Ø mm	DN	Water Content l/m	Weight kg/m	Packing unit parcel/bar	Avai-labili-ty
16102	20	1.9	16.2	15	0.206	0.107	100 m / 4 m	S
16103	25	2.3	20.4	20	0.327	0.164	60 m / 4 m	S
16104	32	2.9	26.2	25	0.531	0.261	40 m / 4 m	S
16105	40	3.7	32.6	32	0.834	0.412	20 m / 4 m	S
16106	50	4.6	40.8	40	1.307	0.638	20 m / 4 m	S
16107	63	5.8	51.4	50	2.075	1.010	12 m / 4 m	S
16108	75	6.8	61.4	-	2.941	1.410	8 m / 4 m	S
16109	90	8.2	73.6	65	4.254	2.030	4 m / 4 m	S
16110	110	10.0	90.0	80	6.362	3.010	4 m / 4 m	S
16111	125	11.4	102.2	100	8.200	3.912	4 m / 4 m	S

ML5 Fibre Pipe SDR 7.4 / S 3.2 PP-R, PP-RCT for hot and cold water acc. to DIN 8077/78 and EN ISO 15874, class 1/8 bar, class 2/8 bar, 70°/11 bar, 20°/25 bar WRAS 1910531, SKZ certificate A 634, colour green with silver line

A. no.	Outer Ø mm	Wall thickness mm	Inner Ø mm	DN	Water Content l/m	Weight kg/m	Packing unit parcel/bar	Avai-labili-ty
16322	20	2.8	14.4	15	0.163	0.149	100 m / 4 m	S
16323	25	3.5	18.0	20	0.254	0.236	60 m / 4 m	S
16324	32	4.4	23.2	25	0.423	0.385	40 m / 4 m	S
16325	40	5.5	29.0	32	0.661	0.584	20 m / 4 m	S
16326	50	6.9	36.2	40	1.029	0.916	20 m / 4 m	S
16327	63	8.6	45.8	50	1.647	1.474	12 m / 4 m	S
16328	75	10.3	54.4	-	2.324	2.048	8 m / 4 m	S
16329	90	12.3	65.4	65	3.359	2.922	4 m / 4 m	S
16330	110	15.1	79.8	80	5.001	4.374	4 m / 4 m	S
16331	125	17.1	90.8	100	6.48	5.53	4 m / 4 m	S
16342	160	21.9	116.2	125	10.60	9.04	4 m / 4 m	S
16343	200	27.4	145.2	150	16.56	14.10	4 m / 4 m	S
16344	250	34.2	181.6	200	25.90	22.10	4 m / 4 m	S

DN: Nominal Diameter (Approximate inner diameter as a dimensionless standard designation for piping and fittings)

S = Standard-Range stored, MQ = Minimum order quantity in pieces or meter

SYSTEM DESCRIPTION

ML5 Fibre Pipe SDR 11 / S 5 PP-R, PP-RCT for hot and cold water acc. to DIN 8077/78 and EN ISO 15874, class 1/6 bar, class 2/6 bar, 70°/7 bar, 20°/16 bar WRAS, SKZ, colour green with silver line

A. no.	Outer Ø mm	Wall thickness mm	Inner Ø mm	DN	Water Content l/m	Weight kg/m	Packing unit parcel/bar	Availability
16361	125	11.4	102.2	100	8.200	4.065	4 m / 4 m	S
16362	160	14.6	130.8	125	13.440	6.645	4 m / 4 m	S
16363	200	18.2	163.6	150	21.031	10.230	4 m / 4 m	S
16364	250	22.7	204.6	200	32.865	16.125	4 m / 4 m	S

ML5 Fibre Pipe SDR 7.4 / S 3.2 PP-R for hot and cold water acc. to DIN 8077/78 and EN ISO 15874, class 1/8 bar, class 2/6 bar, 70°/8 bar, 20°/20 bar WRAS, SKZ colour green with white line

A. no.	Outer Ø mm	Wall thickness mm	Inner Ø mm	DN	Water Content l/m	Weight kg/m	Packing unit parcel/bar	Availability
16722	20	2.8	14.4	15	0.163	0.149	100 m / 4 m	S
16723	25	3.5	18.0	20	0.254	0.236	60 m / 4 m	S
16724	32	4.4	23.2	25	0.423	0.385	40 m / 4 m	S
16725	40	5.5	29.0	32	0.661	0.584	20 m / 4 m	S
16726	50	6.9	36.2	40	1.029	0.916	20 m / 4 m	S
16727	63	8.6	45.8	50	1.647	1.474	12 m / 4 m	S
16728	75	10.3	54.4	-	2.324	2.048	8 m / 4 m	S
16729	90	12.3	65.4	65	3.359	2.922	4 m / 4 m	S
16730	110	15.1	79.8	80	5.001	4.374	4 m / 4 m	S
16731	125	17.1	90.8	100	6.48	5.53	4 m / 4 m	S
16732	160	21.9	116.2	125	10.60	9.04	4 m / 4 m	S
16733	200	27.4	145.2	150	16.56	14.10	4 m / 4 m	S
16734	250	34.2	181.6	200	25.90	22.10	4 m / 4 m	S

ML5 Fibre Pipe SDR 9 / S 4 PP-RCT for hot and cold water acc. to DIN 8077/78 and EN ISO 15874, class 1/8 bar, class 2/8 bar, 70°/10 bar, 20°/20 bar WRAS, SKZ colour green with golden line

A. no.	Outer Ø mm	Wall thickness mm	Inner Ø mm	DN	Water Content l/m	Weight kg/m	Packing unit parcel/bar	Availability
16524	32	3.6	24.8	25	0.483	0.31	40 m / 4 m	S
16525	40	4.5	31.0	32	0.754	0.49	20 m / 4 m	S
16526	50	5.6	38.8	40	1.182	0.76	20 m / 4 m	S
16527	63	7.1	48.8	50	1.870	1.20	12 m / 4 m	S
16528	75	8.4	58.2	-	2.660	1.69	8 m / 4 m	S
16529	90	10.1	69.8	65	3.826	2.44	4 m / 4 m	S
16530	110	12.3	85.4	80	5.728	3.62	4 m / 4 m	S
16531	125	14.0	97.0	100	7.389	4.66	4 m / 4 m	S

S = Standard-Range stored, MQ = Minimum order quantity in pieces or meter

UV ML5 Fibre Pipe with UV protection layer, SDR 7.4 / S 3.2 / PP-R for hot and cold water acc. to DIN 8077/78 and EN ISO 15874, class 1/8 bar, class 2/6 bar, 70°/8 bar, 20°/20 bar colour black

A. no.	Outer Ø mm	Wall thickness mm	Inner Ø mm	DN	Water Content l/m	Weight kg/m	Packing unit parcel/bar	Avai-labili-ty
40322	20	2.8	14.4	15	0.163	0.149	100 m / 4 m	S
40323	25	3.5	18.0	20	0.254	0.236	60 m / 4 m	S
40324	32	4.4	23.2	25	0.423	0.385	40 m / 4 m	S
40325	40	5.5	29.0	32	0.661	0.584	20 m / 4 m	S
40326	50	6.9	36.2	40	1.029	0.916	20 m / 4 m	S
40327	63	8.6	45.8	50	1.647	1.474	12 m / 4 m	S
40328	75	10.3	54.4	-	2.324	2.048	8 m / 4 m	S
40329	90	12.3	65.4	65	3.359	2.922	4 m / 4 m	S
40330	110	15.1	79.8	80	5.001	4.374	4 m / 4 m	MQ

Support for pipes, galvanized
for horizontally installed pipes, self-clamping up to Ø 75 mm

A. no.	Diameter (d) mm	Packing unit parcel/bar
14902	20	75 / 3 m
14903	25	75 / 3 m
14904	32	75 / 3 m
14905	40	15 / 3 m
14906	50	15 / 3 m
14907	63	15 / 3 m
14908	75	15 / 3 m
14909	90	15 / 3 m
14910	110	15 / 3 m

1.3.2 ECOSAN Fittings

Long cross-over section

A. no.	Diameter (d) mm	Weight kg/pc.	Packing unit carton/bag	Avail-ability
16502	20	0.057	150 / 10	S
16503	25	0.088	100 / 10	S
16504	32	0.146	70 / 10	S
16506	40	0.294	25 / 5	MQ

Short cross-over section

A. no.	Diameter (d) mm	Weight kg/pc.	Packing unit carton/bag	Avail-ability
17502	20	0.026	10	S
17503	25	0.044	10	S

S = Standard-Range stored, MQ = Minimum order quantity in pieces or meter

SYSTEM DESCRIPTION

Welding socket

A. no.	Diameter (d) mm	Weight kg/pc.	Packing unit carton/bag	Avail-ability
17002	20	0.012	600 / 10	S
17003	25	0.017	400 / 10	S
17004	32	0.030	250 / 10	S
17005	40	0.043	170 / 10	S
17006	50	0.070	100 / 5	S
17007	63	0.160	50 / 1	S
17008	75	0.243	40 / 1	S
17009	90	0.391	24 / 1	S
17010	110	0.613	15 / 1	S
17011	125	0.755	12 / 1	S

Reducer male / female

A. no.	Diameter (d) mm	Weight kg/pc.	Packing unit carton/bag	Avail-ability
17603	25 / 20	0.017	300 / 10	S
17605	32 / 20	0.017	250 / 10	S
17606	32 / 25	0.019	200 / 10	S
17608	40 / 20	0.022	400 / 5	S
17609	40 / 25	0.025	300 / 5	S
17610	40 / 32	0.030	200 / 5	S
17612	50 / 20	0.037	250 / 5	S
17613	50 / 25	0.039	150 / 5	S
17614	50 / 32	0.048	200 / 5	S
17615	50 / 40	0.050	150 / 5	S
17618	63 / 25	0.066	100 / 1	S
17619	63 / 32	0.072	120 / 1	S
17620	63 / 40	0.079	100 / 1	S
17621	63 / 50	0.103	75 / 1	S
17627	75 / 50	0.122	50 / 1	S
17628	75 / 63	0.156	50 / 1	S
17634	90 / 50	0.168	40 / 1	S
17635	90 / 63	0.196	40 / 1	S
17636	90 / 75	0.239	30 / 1	S
17643	110 / 63	0.327	30 / 1	S
17644	110 / 75	0.312	25 / 1	S
17645	110 / 90	0.473	20 / 1	S
17646	125 / 110	0.755	15 / 1	S

Reducer male, butt welding
PP-RCT

SDR	A. no.	Diameter (d) mm	Packing unit carton/bag	Avail-ability
11	17647 / 2	160 / 110	10 / 1	MQ
11	17648 / 2	160 / 125	10 / 1	MQ
11	17650 / 2	200 / 160	5 / 1	MQ
11	17652 / 2	250 / 200	1 / 1	MQ
11	17652/2	250 / 160	1 / 1	MQ
7,4	17648	160 / 110	1 / 1	MQ
7,4	17647	160 / 125	1 / 1	MQ

S = Standard-Range stored, MQ = Minimum order quantity in pieces or meter

Elbow 90° for socket welding and butt welding
Material:
20-125 mm: PP-R
160-250 mm: PP-RCT
Colour: Green
Standards: EN ISO 15874, DIN 16962
Processing: Type A: Socket welding,
Type B: Butt welding/molded,
Type C: Butt welding/segmented

Type A

Type B

Type C

SDR	A. no.	Diameter (d) mm	Type	Weight kg/pc.	Packing unit carton/bag	Avail-ability
	17042	20	A	0.018	500 / 10	S
	17043	25	A	0.026	300 / 10	S
	17044	32	A	0.049	150 / 10	S
	17045	40	A	0.075	100 / 5	S
	17046	50	A	0.170	50 / 5	S
	17047	63	A	0.279	25 / 1	S
	17048	75	A	0.464	15 / 1	S
	17049	90	A	0.783	12 / 1	S
	17050	110	A	1.087	12 / 1	S
	17051	125	A	2.185	8 / 1	S
11	9017054	160	C	4.772	1 / 1	S
11	9017056	200	C	7.907	1 / 1	S
11	9017058	250	C	17.289	1 / 1	S
11	17053/2	160	B	2.96	1 / 1	S
11	17055/2	200	B	5.44	1 / 1	S
11	17057/2	250	B	9.62	1 / 1	S
7,4	17052	160	B	4.07	1 / 1	S

Elbow 90° female/male

A. no.	Diameter (d) mm	Weight kg/pc.	Packing unit carton/bag	Avail-ability
17062	20	0.016	250 / 10	MQ 250
17063	25	0.026	150 / 10	MQ 150
17064	32	0.047	80 / 10	MQ 160
17065	40	0.071	40 / 5	MQ 120

Elbow 45° for socket welding and butt welding
Material:
20-125 mm: PP-R
160-250 mm: PP-RCT
Colour: Green
Standards: EN ISO 15874, DIN 16962
Product line: Ø 20–250 mm
Processing: Type A: Socket welding,
Type B: Butt welding/molded,
Type C: Butt welding/segmented

Type A

Type C

Type B

SDR	A. no.	Diameter (d) mm	Type	Weight kg/pc.	Packing unit carton/bag	Avail-ability
	17102	20	A	0.017	200 / 10	S
	17103	25	A	0.024	150 / 10	S
	17104	32	A	0.042	100 / 10	S
	17105	40	A	0.059	50 / 5	S
	17106	50	A	0.133	25 / 5	S
	17107	63	A	0.236	12 / 1	S
	17108	75	A	0.359	20 / 1	S
	17109	90	A	0.645	15 / 1	S
	17110	110	A	0.787	8 / 1	S
	17111	125	A	1.190	5 / 1	S
11	9017114	160	C	3.815	1 / 1	S
11	9017116	200	C	5.819	1 / 1	S
11	9017118	250	C	12.642	1 / 1	S
11	17113/2	160	B	2.40	1 / 1	S
11	17115/2	200	B	4.450	1 / 1	S
11	17117/2	250	B	8.00	1 / 1	S
7,4	17113	160	B	3.700	1 / 1	S

S = Standard-Range stored, MQ = Minimum order quantity in pieces or meter

SYSTEM DESCRIPTION

Elbow 45° female/male

A. no.	Diameter (d) mm	Weight kg/pc.	Packing unit carton/bag	Avail-ability
17122	20	0.014	300 / 10	MQ 600
17123	25	0.022	200 / 10	MQ 600
17124	32	0.050	80 / 10	MQ 320
17125	40	0.065	60 / 5	MQ 300

Tee for socket welding and butt welding
Material:
20-125 mm: PP-R
160-250 mm: PP-RCT
Colour: Green
Standards: EN ISO 15874, DIN 16962
Product line: Ø 20–250 mm
Processing: Type A: Socket welding,
Type B: Butt welding/molded,
Type C: Butt welding/segmented

Type A

Type B

Type C

SDR	A. no.	Diameter (d) mm	Type	Weight kg/pc.	Packing unit carton/bag	Avail-ability
	17202	20	A	0.024	300 / 10	S
	17203	25	A	0.033	200 / 10	S
	17204	32	A	0.068	100 / 10	S
	17205	40	A	0.108	30 / 5	S
	17206	50	A	0.213	30 / 2	S
	17207	63	A	0.369	10 / 1	S
	17208	75	A	0.621	15 / 1	S
	17209	90	A	1.046	12 / 1	S
	17210	110	A	1.321	6 / 1	S
	17211	125	A	2.710	5 / 1	S
11	9017214	160	C	3.910	1 / 1	S
11	9017216	200	C	6.495	1 / 1	S
11	9017218	250	C	15.626	1 / 1	S
11	17213/2	160	B	4.020	1 / 1	S
11	17215/2	200	B	7.360	1 / 1	S
11	17217/2	250	B	13.800	1 / 1	S
7,4	17212	160	B	5.280	1 / 1	S

S = Standard-Range stored, MQ = Minimum order quantity in pieces or meter

Tee reduced for socket welding and butt welding
Material: 20-125 mm: PP-R
160-250 mm: PP-RCT
Colour: Green
Standards: EN ISO 15874, DIN 16962
Product line: Ø 20–250 mm
Processing: Type A: Socket welding,
Type B: Butt welding/molded,
Type C: Butt welding/segmented

Type A

Type B

Type C

SDR	A. no.	Diameter (d) mm	Type	Weight kg/pc.	Packing unit carton/bag	Avail-ability
	17250	25 × 20 × 20	A	0.037	250 / 10	S
	17254	25 × 20 × 25	A	0.034	250 / 10	S
	17269	32 × 25 × 25	A	0.073	120 / 5	MQ
	17273	32 × 20 × 32	A	0.064	120 / 5	S
	17275	32 × 25 × 32	A	0.066	120 / 5	S
	17305	40 × 20 × 40	A	0.079	80 / 5	S
	17307	40 × 25 × 40	A	0.080	80 / 5	S
	17309	40 × 32 × 40	A	0.103	80 / 5	S
	17311	50 × 20 × 50	A	0.183	40 / 2	MQ
	17334	50 × 25 × 50	A	0.187	40 / 2	S
	17336	50 × 32 × 50	A	0.191	40 / 2	S
	17338	50 × 40 × 50	A	0.195	40 / 2	S
	17352	63 × 25 × 63	A	0.371	25 / 1	S
	17354	63 × 32 × 63	A	0.324	25 / 1	S
	17356	63 × 40 × 63	A	0.366	25 / 1	S
	17358	63 × 50 × 63	A	0.433	25 / 1	S
	17370	75 × 25 × 75	A	0.589	15 / 1	S
	17372	75 × 32 × 75	A	0.595	15 / 1	S
	17374	75 × 40 × 75	A	0.520	15 / 1	S
	17376	75 × 50 × 75	A	0.594	15 / 1	S
	17378	75 × 63 × 75	A	0.572	15 / 1	S
	17394	90 × 50 × 90	A	0.949	12 / 1	MQ
	17396	90 × 63 × 90	A	0.907	12 / 1	S
	17398	90 × 75 × 90	A	1.001	8 / 1	S
	17414	110 × 63 × 110	A	1.206	6 / 1	S
	17416	110 × 75 × 110	A	1.228	6 / 1	S
	17418	110 × 90 × 110	A	1.217	6 / 1	S
	17420	125 × 110 × 125	A	2.560	6 / 1	MQ
11	9017423	160 × 110 × 160	C	4.318	1 / 1	S
11	9017438	160 × 125 × 160	C	4.295	1 / 1	S
11	9017442	200 × 160 × 200	C	7.891	1 / 1	S
11	9017446	250 × 160 × 250	C	16.720	1 / 1	S
11	9017450	250 × 200 × 250	C	17.810	1 / 1	S
11	17422/2	160 × 125 × 160	B	3.40	1 / 1	S
11	17423/2	160 × 110 × 160	B	3.50	1 / 1	S
11	17425/2	200 × 160 × 200	B	3.40	1 / 1	S
7,4	17423	160 × 110 × 160	B			MQ

S = Standard-Range stored, MQ = Minimum order quantity in pieces or meter

SYSTEM DESCRIPTION

Weld-in saddle
Material: PP-R
Colour: Green
Standards: EN ISO 15874
Product line: Ø 40–250 mm

A. no.	Diameter (d) Pipe/outlet mm	Drill diameter mm	Weight kg/pc.	Packing unit carton/bag	Availability
17741	40 / 20	25	0.014	250 / 5	S
17742	40 / 25	25	0.016	250 / 5	S
17744	50 / 20	25	0.014	250 / 5	S
17745	50 / 25	25	0.016	250 / 5	S
17747	63 / 20	25	0.014	200 / 5	S
17748	63 / 25	25	0.016	200 / 5	S
17749	63 / 32	32	0.027	150 / 5	S
17750	75 / 20	25	0.014	200 / 5	S
17751	75 / 25	25	0.016	200 / 5	S
17752	75 / 32	32	0.027	120 / 5	S
17753	75 / 40	40	0.054		
17754	90 / 20	25	0.014	200 / 5	S
17756	90 / 25	25	0.017	20 / 5	S
17758	90 / 32	32	0.028	150 / 5	S
17759	90 / 40	40	0.054		
17760	110 / 20	25	0.015	200 / 5	S
17761	110 / 25	25	0.017	150 / 5	S
17762	110 / 32	32	0.028	100 / 5	S
17765	125 / 20	25	0.015	200 / 5	S
17766	125 / 25	25	0.017	150 / 5	S
17767	125 / 32	32	0.028	100 / 5	S
17768	125 / 40	40	0.058		
17769	125 / 50	50			
17780	125 / 63	63	0.161		
17770	160–250/20	25	0.015	200 / 5	S
17771	160–250/25	25	0.017	200 / 5	S
17772	160–250/32	32	0.028	100 / 5	S
17773	160–250/40	40	0.037	200 / 5	S
17774	160–250/50	50	0.048	100 / 5	S
17775	160–250/63	63	0.071	50 / 1	S
17786	160 / 75	75	0.227		
17787	160 / 90	90			
17796	200 / 75	75			
17797	200 / 90	90	0.355		
17866	250 / 75	75	0.231		
17867	250 /90	90	0.355		

Weld-in saddle female thread
Material: PP-R/brass
Colour: Green
Standards: EN ISO 15874
Product line: Ø 40–250 mm

A. no.	Diameter (d) Pipe/outlet mm	Drill diameter mm	Weight kg/pc.	Packing unit carton/bag	Availability
18352	40 × 1/2"	25	0.113	100 / 5	S
18353	40 × 3/4"	25	0.138	100 / 5	S
18354	50 × 1/2"	25	0.028	100 / 5	S
18355	50 × 3/4"	25	0.137	100 / 5	S
18356	63 × 1/2"	25	0.113	100 / 5	S
18357	63 × 3/4"	25	0.138	50 / 5	S
18358	63 × 1"	32	0.218	50 / 5	S

S = Standard-Range stored, MQ = Minimum order quantity in pieces or meter

18359	75 × 1/2"	25	0.113	80 / 5	S
18360	75 × 3/4"	25	0.034	80 / 5	S
18361	75 × 1"	32	0.219	50 / 5	S
18362	90 × 1/2"	25	0.114	80 / 5	S
18363	90 × 3/4"	25	0.139	80 / 5	S
18364	90 × 1"	32	0.219	50 / 5	S
18366	110 × 1/2"	25	0.114	100 / 5	S
18367	110 × 3/4"	25	0.139	80 / 5	S
18368	110 × 1"	32	0.221	50 / 5	S
18370	125 × 1/2"	25	0.113	50 / 5	S
18371	125 × 3/4"	25	0.139	50 / 5	S
18372	125 × 1"	32	0.218	50 / 5	S
18375	160–250 × 1/2"	25	0.113	100 / 5	S
18376	160–250 × 3/4"	25	0.140	50 / 5	S
18377	160–250 × 1"	32	0.220	50 / 5	S

End cap
Material: 20-125 mm: PP-R
160-250 mm: PP-RCT
Colour: Green
Standards: EN ISO 15874
Product line: Ø 20–250 mm
Processing: Type A: Socket welding
Type B: Butt welding

Type A

Type B

SDR	A. no.	Diameter (d) mm	Type	Weight kg/pc.	Packing unit carton/bag	Avail-ability
	17702	20	A	0.009	400 / 10	S
	17703	25	A	0.014	250 / 10	S
	17704	32	A	0.024	150 / 10	S
	17705	40	A	0.038	100 / 5	S
	17706	50	A	0.081	60 / 5	S
	17707	63	A	0.180	30 / 1	S
	17708	75	A	0.255	20 / 1	S
	17709	90	A	0.410	30 / 1	S
	17710	110	A	0.636	15 / 1	S
	17711	125	A	0.532	12 / 1	S
11	17712/2	160	B	0.900	1 / 1	S
11	17713/2	200	B	2.030	1 / 1	S
11	17714/2	250	B	3.171	1 / 1	S

Flange adapter with gasket
Material: PP-R
Seal material: EPDM
Colour: Green
Standards: EN ISO 15874
Product line: Ø 20–250 mm
Processing: Type A: Socket welding
Type B: Butt welding

Type A

Type B

SDR	A. no.	Diameter (d) mm	Type	Weight kg/pc.	Packing unit carton/bag	Avail-ability
	17807	63	A	0.125	30 / 1	S
	17808	75	A	0.184	20 / 1	S
	17809	90	A	0.239	15 / 1	S
	17810	110	A	0.327	12 / 1	S
	17811	125	A	0.890	10 / 1	S
11	9017811	125*	B	1.125	1 / 1	S
11	17812/2	160*	B	1.800	1 / 1	S
11	17814/2	200*	B	3.395	1 / 1	S
11	17816/2	250*	B	5.022	1 / 1	S
7,4	17812	160	B	2.120	1 / 1	S

* for butterfly valve use

S = Standard-Range stored, MQ = Minimum order quantity in pieces or meter

PP Flange fibre reinforced
Material: PP fibre-reinforced with steel insert
Colour: Black
Standards: EN 1092
Product line: Ø 63–250 mm
PN 16

A. no.	Diameter (d) mm	DN	Weight kg/pc.	Packing unit carton/bag	Avail-ability
14207	63	50	0.760	1	S
14208	75	65	1.130	1	S
14209	90	80	1.180	1	S
14210	110	100	1.630	1	S
14211	125	100	1.190	1	S
14212	160	150	2.760	1	S
14214	200	200	3.810	1	S
14216	250	250	5.990	1	S

Socket for electric welding
Material: PP-RCT
Colour: Green
SDR 7.4
Welding voltage: 8–48 V
Pin size: 4 mm
With bar code
Suitable welding tool A. no. 15270

A. no.	Diameter (d) mm	Weight kg/pc.	Packing unit carton/bag	Avail-ability
14802	20	0.045	35 / 1	S
14803	25	0.055	25 / 1	S
14804	32	0.075	20 / 1	S
14805	40	0.110	25 / 1	S
14806	50	0.155	20 / 1	S
14807	63	0.225	25 / 1	S
14808	75	0.330	36 / 1	S
14809	90	0.490	18 / 1	S
14810	110	0.800	15 / 1	S
14811	125	1.060	1 / 1	S
14812	160	1.855	1 / 1	S
14814	200	4.100	1 / 1	S
14816	250	6.550	1 / 1	S

1.3.3 ECOSAN Adapters

Adapter female thread
Material: PP-R/brass
Colour: Green
Standards: EN ISO 15874
Product line: Ø 20–75 mm
Processing: Socket welding

Type A

Type B

A. no.	Diameter (d) mm	Type	Weight kg/pc.	Packing unit carton/bag	Avail-ability
18104	20 × 1/2"	A	0.071	130 / 10	S
18105	20 × 3/4"	A	0.101	100 / 10	MQ
18106	25 × 1/2"	A	0.072	130 / 10	S
18107	25 × 3/4"	A	0.101	100 / 10	S
18108	32 × 3/4"	A	0.141	100 / 10	S
18109	32 × 1"	B	0.224	50 / 5	S
18110	40 × 1"	B	0.211	50 / 5	MQ
18111	40 × 1 1/4"	B	0.392	30 / 5	S
18113	50 × 1 1/2"	B	0.483	25 / 5	S
18115	63 × 2"	B	0.705	10 / 1	S
18116	75 × 2"	B	0.764	8 / 1	MQ
18117	75 × 2 1/2"	B	1.195	8 / 1	S

S = Standard-Range stored, MQ = Minimum order quantity in pieces or meter

Adapter male thread
Material: PP-R/brass
Colour: Green
Standards: EN ISO 15874
Product line: Ø 20–110 mm
Processing: Socket welding

Type A

Type B

A. no.	Diameter (d) mm	Type	Weight kg/pc.	Packing unit carton/bag	Avail-ability
18154	20 × 1/2"	A	0.101	100 / 10	S
18155	20 × 3/4"	A	0.138	100 / 10	MQ
18156	25 × 1/2"	A	0.098	100 / 10	S
18157	25 × 3/4"	A	0.147	100 / 10	S
18158	32 × 3/4"	A	0.151	80 / 5	S
18159	32 × 1"	B	0.254	50 / 5	S
18160	40 × 1"	B	0.259	50 / 5	MQ
18161	40 × 1 1/4"	B	0.326	30 / 5	S
18162	50 × 1 1/4"	B	0.439	20 / 5	MQ
18163	50 × 1 1/2"	B	0.436	20 / 5	S
18165	63 × 2"	B	0.752	20 / 1	S
18167	75 × 2 1/2"	B	0.998	8 / 1	S
18169	90 × 3"	B	1.622	6 / 1	S
18171	110 × 2 1/2"	B	1.061	4 / 1	S

Elbow adapter female from 1" for wrench

A. no.	Diameter (d) mm	Packing unit carton/bag	Availability
18204	20 × 1/2"	150 / 10	S
18205	20 × 3/4"	100 / 10	MQ
18206	25 × 1/2"	120 / 10	S
18207	25 × 3/4"	100 / 10	S
18208	32 × 3/4"	70 / 5	S
18209	32 × 1"	40 / 10	S

Elbow adapter male from 1" for wrench

A. no.	Diameter (d) mm	Packing unit carton/bag	Availability
18254	20 × 1/2"	100 / 10	S
18256	25 × 1/2"	100 / 10	S
18257	25 × 3/4"	70 / 10	S
18258	32 × 3/4"	70 / 5	S
18259	32 × 1"	40 / 5	S

Tee adapter female from 1" for wrench

A. no.	Diameter (d) mm	Packing unit carton/bag	Availability
18304	20 × 1/2" × 20	100 / 10	S
18306	25 × 1/2" × 25	80 / 10	S
18307	25 × 3/4" × 25	70 / 10	S
18311	32 × 1/2" × 32	40 / 5	S
18310	32 × 3/4" × 32	40 / 5	S
18309	32 × 1" × 32	30 / 5	S
18312	40 × 3/4" × 40	30 / 5	S

Screw adapter pipe end/pipe end

A. no.	Diameter (d) mm	Packing unit carton/bag	Availability
24182	20	80 / 1	S
24183	25	50 / 1	S
24184	32	50 / 1	S
24185	40	25 / 1	S
24186	50	20 / 1	S
24187	63	15 / 1	S

S = Standard-Range stored, MQ = Minimum order quantity in pieces or meter

Screw adapter, male, thread/pipe end

A. no.	Diameter (d) mm	Packing unit carton/bag	Avail-ability
24172	20 × 1/2"	80 / 1	S
24173	25 × 3/4"	50 / 1	S
24174	32 × 1"	50 / 1	S
24175	40 × 11/4"	25 / 1	S
24176	50 × 11/2"	20 / 1	S
24177	63 × 2"	15 / 1	S

Screwed union plastic/brass F with socket end

A. no.	Diameter (d) mm	Packing unit carton/bag	Avail-ability
20043	20 × 1/2"	100 / 1	S
20045	20 × 3/4"	100 / 1	S
20047	25 × 3/4"	100 / 1	S
20050	32 × 1"	70 / 1	S
20053	40 × 1 1/4"	50 / 1	S
20056	50 × 1 1/2"	30 / 1	S
20058	63 × 2"	20 / 1	S

1.3.4 ECOSAN Fittings and accessories

Wall union, female

A. no.	Diameter (d) mm	Packing unit carton/bag	Avail-ability
18004	20 × 1/2"	100 / 10	S
18006	25 × 1/2"	80 / 10	S
18007	25 × 3/4"	80 / 10	S

Double wall union, female, two outlets

A. no.	Diameter (d) mm	Packing unit carton/bag	Avail-ability
18016	25 × 1/2"	80 / 10	S

Wall union plate, female distances 150 mm

A. no.	Diameter (d) mm	Packing unit carton/bag	Avail-ability
18034	20 × 1/2"	1	S
18036	25 × 1/2"	1	S

S = Standard-Range stored, MQ = Minimum order quantity in pieces or meter

SYSTEM DESCRIPTION

Assembly plate, galvanized

A. no.	Diameter (d) mm	Packing unit carton/bag	Avail-ability
15480	2000 × 50 × 3	25 / 1	S

Assembly unit, galvanized, for wall union, with screws
Distance 150 / 80 mm

A. no.	Diameter (d) mm	Packing unit carton/bag	Avail-ability
15482	420 × 60 × 45	1	S

S = Standard-Range stored, MQ = Minimum order quantity in pieces or meter

1.3.5 ECOSAN Shut-off devices and accessories

Slanted seat valve, body

A. no.	Diameter (d) mm	Packing unit carton/bag	Avail-ability
20504	20 × 3/4"	50 / 5	MQ 200
20505	25 × 3/4"	50 / 5	MQ 200
20508	32 × 1"	25 / 5	MQ 100
20510	40 × 1 1/4"	15 / 1	MQ 90

Shut-off valve, body
without discharge screw

A. no.	Diameter (d) mm	Packing unit carton/bag	Avail-ability
20304	20 × 3/4"	50 / 5	S
20306	25 × 3/4"	50 / 5	S
20308	32 × 1"	30 / 5	S
20310	40 × 1 1/4"	25 / 1	S

Shut off valve, body

A. no.	Diameter (d) mm	Packing unit carton/bag	Avail-ability
20324	20 × 3/4"	50 / 5	MQ 200
20326	25 × 3/4"	50 / 5	MQ 200
20328	32 × 1"	20 / 5	MQ 100
20330	40 × 1 1/4"	15 / 1	MQ 90

Shut-off valve

A. no.	Diameter (d) mm	Packing unit carton/bag	Avail-ability
20604	20 × 3/4"	50 / 5	S
20606	25 × 3/4"	50 / 5	S
20608	32 × 1"	30 / 5	S
20610	40 × 1 1/4"	25 / 1	S

Shut-off valve, upper part

A. no.	Diameter (d) mm	Packing unit carton/bag	Avail-ability
14602	3/4"	125 / 1	S
14604	1"	75 / 1	S
14606	1 1/4"	40 / 1	S

Concealed valve, upper part
in flexible length 60–110 mm

A. no.	Diameter (d) mm	Packing unit carton/bag	Avail-ability
14612	3/4"	50 / 1	S
14614	1"	50 / 1	S

S = Standard-Range stored, MQ = Minimum order quantity in pieces or meter

SYSTEM DESCRIPTION

Concealed valve, upper part

A. no.	Diameter (d) mm	Packing unit carton/bag	Avail-ability
14611	3/4"	40 / 1	S
14617	1"	40 / 1	S

Concealed valve, upper part, public authority design

A. no.	Diameter (d) mm	Packing unit carton/bag	Avail-ability
14622	3/4"	60 / 1	S
14628	1"	40 / 1	S

Ball valve
Handle: glass fibre reinforced polyamide, ball and stem: brass
PTFE seats, NBR O-ring

A. no.	Diameter (d) mm	Packing unit carton/bag	Avail-ability
20402	20	50 / 5	S
20403	25	25 / 5	S
20404	32	15 / 1	S
20405	40	10 / 1	S
20412	50	6 / 1	S
20414	63	5 / 1	S
20416	75	5 /1	MQ

PP ball valve with screw connection
Material: PP ball valve with screw connection PN 10
Colour: Green
Product line: Ø 20–63 mm
Processing: Socket welding
Size up to 110 mm in request

A. no.	Diameter (d) mm	Weight kg/pc.	Packing unit carton/bag	Availability
20422	20	0.16	1 / 1	S
20423	25	0.34	1 / 1	S
20424	32	0.35	1 / 1	S
20425	40	0.65	1 / 1	S
20426	50	0.70	1 / 1	S
20427	63	1.14	1 / 1	S

S = Standard-Range stored, MQ = Minimum order quantity in pieces or meter

SYSTEM DESCRIPTION

Assembly plug
Material: PP-R
Colour: Blue, Red
Product line: Ø 1/2"

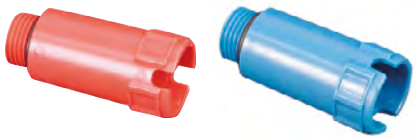

A. no.	Diameter (d) mm	Colour	Weight kg/pc.	Packing unit carton/bag	Avail-ability
15413	1 / 2"	Red	0.022	200 / 10	S
15414	1 / 2"	Blue	0.022	200 / 10	S

Socket welding machine up to Ø 63 mm "professional"
Working range: max. Ø 20–63 mm
Power supply: 230 V–50/60 Hz
Absorbed power: 800 W
Working temperature: TFE 260 °C ± 10 °C
Without welding tools

A. no.	Diameter (d) mm	Weight kg/pc.	Packing unit carton/bag	Avail-ability
15016	20–63	1.820	1	S

Socket welding machine up to Ø 63 mm "basic"
Working range: max. Ø 20–63 mm
Power supply: 230 V–50/60 Hz
Absorbed power: 500 W
Working temperature: TFE 260 °C ± 10 °C
Without welding tools

A. no.	Diameter (d) mm	Weight kg/pc.	Packing unit carton/bag	Avail-ability
15025	20–63	1.440	1	S

S = Standard-Range stored, MQ = Minimum order quantity in pieces or meter

SYSTEM DESCRIPTION

Socket welding machine up to Ø 125 mm
Working range: max. Ø 20–125 mm
Power supply: 230 V–50/60 Hz
Absorbed power: 1,400 W
Working temperature: TFE 260 °C ± 10 °C
Without welding tools

A. no.	Diameter (d) mm	Weight kg/pc.	Packing unit carton/bag	Avail-ability
15015	20–125	3.160	1	S

Socket welding machine for pipes from 40 to 125 mm
Product line: Ø 40–125 mm
Processing: Socket welding

A. no.	Weight kg/pc.	Packing unit carton/bag	Availability
15205	50	1	S

Welding gauge
Material: PP-R
Colour: Green
Product line: Ø 20–125 mm
For marking the welding depth on the pipe

A. no.	Weight kg/pc.	Packing unit carton/bag	Availability
15030	0.0056	700 / 50	S

Butt welding machine for pipes up to 250 mm
Working range: max. Ø 75–250 mm
Power supply: 230 VAC 50/60 Hz
Absorbed power: 3,500 W
Working temperature: 210 °C ± 10 °C

A. no.	Weight kg/pc.	Packing unit carton/bag	Availability
15207	63	1	S

S = Standard-Range stored, MQ = Minimum order quantity in pieces or meter

SYSTEM DESCRIPTION

Welding machine for electric fittings
Working range: 20–315 mm
Power supply: 230 V single phase 50/60 Hz
Universal adapter: 4.0–4.7 mm
Laser scanner
For fittings from 8–48 V

A. no.	Weight kg/pc.	Packing unit carton/bag	Availability
15270	25.0	1	S

Rotational pipe scraper
Professional rotary scrapers, essential to prepare the plastic pipes and fittings before electro-fusion welding

Peeling depth: 0.2 mm (0.15–0.25 mm)

A. no.	Working range	Weight kg/pc.	Packing unit carton/bag	Avail-ability
15167	20–125	1.100	1	S

Pipe scraper
Professional rotary scrapers, essential to prepare the plastic pipes and fittings before electro-fusion welding

Peeling depth: 0.3 mm (0.25–0.35 mm)

A. no.	Working range	Weight kg/pc.	Packing unit carton/bag	Avail-ability
15169	90 (SDR 11) – 315 (SDR 17.6)	6.500	1	S

Cleaning towels for welded plastic joints
1 can = 100 towels
Ingredient: Ethanol

A. no.	Weight kg/pc.	Packing unit carton/bag	Availability
15163	-	1	S

S = Standard-Range stored, MQ = Minimum order quantity in pieces or meter

SYSTEM DESCRIPTION

Welding set "BASIC 40" with metal case
Working range: max. Ø 20–63 mm
Power supply: 230 V–50/60 Hz
Absorbed power: 500 W
With welding tools 20–40 mm

A. no.	Diameter (d) mm	Weight kg/pc.	Packing unit carton/bag	Avail-ability
21310	20–63	-	1	S

Welding set "Professional 63" with metal case
Working range: max. Ø 20–63 mm
Power supply: 230 V–50/60 Hz
Absorbed power: 800 W
With welding tools 20–63 mm and pipe cutter

A. no.	Diameter (d) mm	Weight kg/pc.	Packing unit carton/bag	Avail-ability
15311	20–63	-	1	S

Assembly tool "Spider"
Universal-purpose welding aid
for socket welding from 63–125 mm

A. no.	Diameter (d) mm	Weight kg/pc.	Packing unit carton/bag	Avail-ability
15212	63–125	6.800	1	S

Pipe cutter for pipes from Ø 20 to 40 mm
Material: Metal
Colour: Yellow

A. no.	Diameter (d) mm	Weight kg/pc.	Packing unit carton/bag	Avail-ability
15001	20–40	0.460	1	S

Pipe cutter for pipes from Ø 20 to 63 mm
Material: Metal
Colour: Yellow

A. no.	Diameter (d) mm	Weight kg/pc.	Packing unit carton/bag	Avail-ability
15003	20–63	1.240	1	S

S = Standard-Range stored, MQ = Minimum order quantity in pieces or meter

SYSTEM DESCRIPTION

Pipe cutter for pipes from Ø 50 to 110 mm
Material: Metal
Range of application: for pipes SDR 6/7.4/11

A. no.	Diameter (d) mm	Weight kg/pc.	Packing unit carton/bag	Avail-ability
15007	50–110	2.0	1	S

Welding attachment
Material: Aluminium, teflon-coated
Standards: according to DVS, type A
Product line: Ø 20–125 mm
Processing: Socket welding

A. no.	Diameter (d) mm	Weight kg/pc.	Packing unit carton/bag	Avail-ability
15042	20	0.100	1	S
15043	25	0.166	1	S
15044	32	0.213	1	S
15045	40	0.268	1	S
15046	50	0.268	1	S
15047	63	0.430	1	S
15048	75	0.668	1	S
15049	90	0.880	1	S
15050	110	1.230	1	S
15051	125	1.520	1	S

Welding tools for weld-in saddle
Material: Aluminium, teflon-coated
Product line: Ø 40–250 mm
Processing: Socket welding

A. no.	Diameter (d) Pipe/outlet mm	Bore diameter mm	Weight kg/pc.	Packing unit carton/bag	Avail-ability
15065	40	25	0.225	1	S
15066	50	25	0.240	1	S
15067	63	25	0.240	1	S
15082	63	32	0.240	1	S
15068	75	25	0.275	1	S
15083	75	32	0.280	1	S
15069	90	25	0.280	1	S
15084	90	32	0.370	1	S
15070	110	25	0.300	1	S
15085	110	32	0.400	1	S
15071	125	25	0.405	1	S
15086	125	32	0.405	1	S
15087	160	25	0.285	1	S
15088	160	32	0.305	1	S
15106	160–250	40	0.350	1	S
15107	160–250	50	0.652	1	S
15108	160–250	63	1.048	1	S

S = Standard-Range stored, MQ = Minimum order quantity in pieces or meter

SYSTEM DESCRIPTION

Hole saw for weld-in saddles
Material: Metal

For installation holes and continuous drilling
A. no. 15094 necessary

A. no.	Diameter (d) mm	Weight kg/pc.	Packing unit carton/bag	Avail-ability
15095	25	-	1	S
15096	32	-	1	S
15097	40	-	1	S
15098	50	-	1	S
15099	63	-	1	S
15100	75	-	1	S
15175	90	-	1	S

Quick change system
With pilot drill for hole saw, bayonet catch, quick change between hole saws of different diameters

A. no.	for A. no.
15094	15095–15175

Welding attachment
for repair of holes up to Ø 8 mm
Material: Aluminium, Teflon-coated

A. no.	Diameter (d) mm	Weight kg/pc.	Packing unit carton/bag	Avail-ability
15080	8	0.169	1	S

Welding plug
for repair of holes up to Ø 8 mm

A. no.	Diameter (d) mm	Weight kg/pc.	Packing unit carton/bag	Avail-ability
21090	8	0.003	1200/100	S

2.1 Safety instructions and intended use

- Carefully read the Technical Manual and the Operating Instructions before starting work.
- POLYMELT Installation Systems may only be planned, assembled and started up as described in the present manual.
- For any deviating fields of application, make sure to obtain POLYMELT'S advice.
- All national and international safety regulations and regulations on accident prevention have to be observed.
- Planning, installation and start-up have to be carried out pursuant to the current directives, standards and regulations, as intended and in accordance with the state of the art.
- Only POLYMELT system components are allowed to be used. The use of other components entails loss of guarantee (refer to the Letter of Guarantee on page 93).
- Observe the general safety regulations when handling assembly tools. Danger of burn.

Handling instructions

- POLYMELT PP-R / PP-RCT pipes can generally be stored at any ambient temperature.
- Nevertheless, the material must never be subject to impacts or blows, particularly at temperatures below 5 °C.
- Do not drop the pipes when unloading them and protect them from falling objects.
- Select the place of storage so as to make sure that the pipes are always supported over their entire length.
- Before starting assembly, check the pipe and particularly the pipe ends for cracks or damage.
- Observe cleanliness when storing and laying the pipes and fittings. In order to protect the pipes and fittings against contamination, do not remove the packaging material before the material is used.
- Pipes (except UV pipes) and fittings must not be exposed to UV radiation over prolonged periods as this reduces the durability and the special properties of the pipes; provide protection of the pipes from the outside.
- At temperatures below zero, water supply pipes must be protected from frost, and drained, if necessary.
- Cut the pipes using only sharp tools.

Avoid sharp impacts and blows to the pipes, especially at low temperatures. Do not throw when unloading. Protect pipes from falling objects.

Put down pipes or pipe bundles carefully. Cover pipes in areas of falling rocks, etc.

Do not use cracked or damaged pipes.

Only cut pipes with sharp cutters.

Do not expose pipes to UV-radiation for extended periods of time.

Protect stored pipes from sun and rain.

During polyfusion welding, do not twist the pipe or fitting; push the pipe and fitting joint together in a straight manner.

Minor corrections can only be made during joining.

Protect pipes filled with water from freezing.

Drain lines in danger of freezing.

3.1 Drinking water

Drinking water is our most important comestible, which is why water should always be available in optimum quality. The basic requirements on the quality of drinking water in Germany are defined in the "Drinking Water Ordinance (Trinkwasserverordnung)". To make sure to achieve the required quality parameters, the generally acknowledged codes of practice must also be observed. Drinking water hygiene has always been an important matter, particularly in sensitive buildings such as hospitals or retirement homes. But according to the latest findings, hygiene has also become an important topic for the construction of single- and two-family houses. In this connection, several requirements must be met by the design of drinking water installations. Only specialised companies should be involved in their planning or modification. They know all the relevant technical aspects and are obliged to adhere to them. The dimensional design of the pipe system, the types of materials used, as well as pipe insulation and minimisation of possible water stagnation in the pipes, are of great significance. Materials in contact with the drinking water may transmit undesirable substances to the drinking water. Improper design and assembly of an installation may also further the formation and growth of biofilm, which establishes optimum conditions for the growth of undesirable microorganisms such as legionellae and pseudomonads. They may become a hazard to the occupants' health. Furthermore, the distance of flow up to the tap should be as short as possible. Dead-water sections in which the water flows only rarely or does not flow at all, need to be avoided by all means.

If the influence of all these factors can be minimized as early as at the planning stage, this will make sure that the interior installations also maintain an optimum water quality. Structural components and materials that are in contact with drinking water must not affect it adversely. Planning and assembly of drinking water installations must also ensure that the comestible drinking water is conveyed under perfect hygienic conditions.

The following lists the most important criteria that need to be observed for perfect planning and assembly of the system and optimum drinking water quality:

- **Avoidance of stagnation**
- **Operation as intended**
- **Short connecting lines**
- **Main consumer at the end of the single-connection line**
- **Separation of sections that are not in use**
- **Correct dimensioning**
- **Hydraulic alignment of circulation systems**
- **Avoidance of cold water heating up (max. 25 °C)**
- **Avoidance of hot water cooling down (min. 55 °C)**
- **Expert initial operation (pressure test, flushing)**

3.2 Types of installation

3.2.1 Connection of drinking water tapping points

The quality of drinking water provided in an interior installation is entirely dependent on the observance of certain temperature ranges and the avoidance of stagnation. Traditional piping networks make it almost impossible to observe both requirements under the prevailing conditions of use. Therefore, drinking water tapping points are nowadays preferably interconnected in loop lines.

Interconnection of tapping points in a loop line proves to be an effective concept of avoiding stagnating water.

Examples of different installation types:

T-installations can lead to water stagnating in the lines.

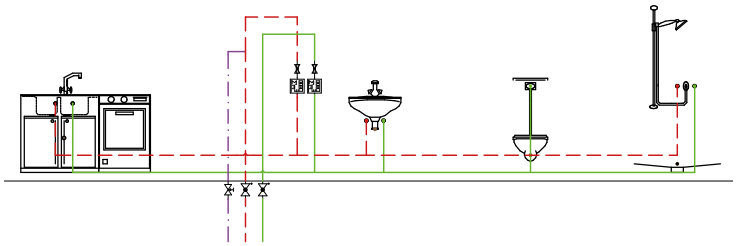

A **loop line** avoids stagnation in a drinking water installation from the very beginning.

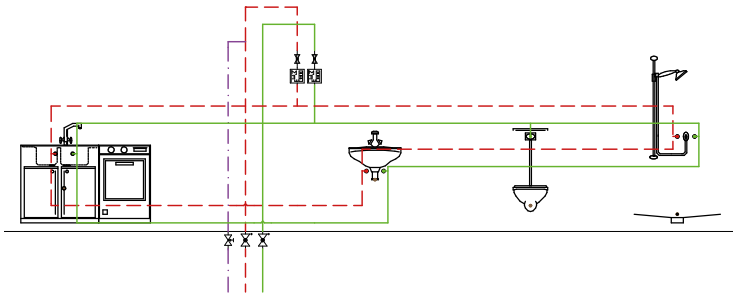

Serial lines only make sense, if the last consumer is a frequently used sanitary device.

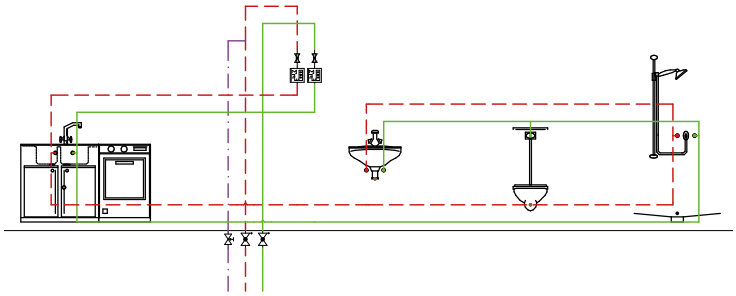

This description is based on directives applicable in Germany and the European Union.

These are the important directives on the quality of water that is intended for consumption by humans:
- Germany: Drinking Water Ordinance (Trinkwasserverordnung TrinkwV2001)
- European Union: Directive on Drinking Water 98/83/EG

Traditional pipe installation, for example, T-systems or floor manifolds for drinking water installation in buildings, frequently causes hygienic problems because of stagnation or inadmissible heating up of cold water.
However, if no other way of installation can be used, water contamination should be avoided by forced pipe flushing.

3.2.2 Fittings for hygienic piping

To provide the required drinking water quality, POLYMELT has developed a new double wall union, which allows the types of piping indicated before to be used.

Several tapping points can now be connected, while the hygienic requirements of, for example, hotels and hospitals are fulfilled. They ensure that the entire amount of water contained in the piping is replaced at regular intervals. This prevents stagnation.

4.1 Standards and regulations

The following standards and guidelines are relevant for planning, design and operating drinking water installation systems in Germany and have to be observed.

4.1.1 Planning of drinking water installation systems

EnEV	German Energy Saving Regulation
DIN 1988	Technical Regulations on Drinking Water Installations
DIN EN 806	Technical Regulations on Drinking Water Installations
DIN 2000	Guidelines on the Requirements on Drinking Water, Planning, Laying, Operation and Maintenance of Supply Systems
DIN 4109	Sound Protection in Structural Engineering
DIN 4102	Fire Prevention
DVGW W 551	Technical Measures for the Reduction of Legionella Growth in Drinking Water Installations
VDI 6023	Hygiene-conscious planning, laying, operation and maintenance of drinking water plants
POLYMELT	Technical Manual
DVS 2207	Welding of Thermoplastics
DVS 2208	Machinery and Appliances for Welding Thermoplastics

4.1.2 System-specific standards

DIN EN ISO 15874	Parts 1-7	Plastics piping systems for hot and cold water installations – Polypropylene (PP)
	Part 1	General information
	Part 2	Pipes
	Part 3	Fittings
	Part 5	Fitness for purpose of the system
	Part 7 / TS	Conformity Assessment
DIN 8077		Polypropylene Pipe Systems, Dimensions
DIN 8078		Polypropylene Pipe Systems General Quality Requirements, Testing
DIN EN ISO 21003	Parts 1-7	Multilayer Composite Pipe Systems for Hot and Cold Water Installations within Buildings

Hygiene

DVGW W 270	Growth of Microorganisms on Materials used in Drinking Water Installations - Tests and Assessment
KTW	Guideline of the Federal Environmental Agency on the Assessment of Organic Materials in Contact with Drinking Water

DIN standards are similar to ISO standards. The ISO standards are valid all over the world, while DIN standards only apply in Germany. ISO stands for the International Standardisation Organisation, which is an Association of Standards Organisations of more than 150 countries. Lately, no clear dividing line between standards seems to exist. For example, an ISO standard can be directly transferred to a DIN standard, or a German standard can be filed with the international committee as a pre-standard, which is why parallelisms exist between standards.

4.2 Terms used

4.2.1 Standard dimension ratio

SDR is an index in use for the classification of plastic pipes, which describes the ratio between a pipe's outer diameter and its wall thickness.

$$SDR = 2 \cdot S + 1 \qquad SDR \approx \frac{d_a}{s}$$

S = pipe series number
s = wall thickness
da = outer diameter

4.2.2 Pipe series number S

The nominal pipe series number is a dimensionless index, which is used for the calculation of the wall thickness of pipes.

The following equation is used for the calculation of the pipe series number S:

$$S = \frac{SDR - 1}{2}$$

Example: ECOSAN Pipe SDR 6 = S 2.5

4.2.3 Nominal pressure (PN)

The abbreviation PN (nominal pressure) indicates a reference value that is representative for a pipe system. This reference value was used in the first plastic pipe standards (for example, DIN 8077 -1974/1989) and was based on a safety factor of 2.0. The maximum working pressure of 20 bar, 16 bar, 10 bar only refers to a service life of 50 years at a working temperature of 20 °C. However, the maximum working pressure is lower for higher temperatures.
This circumstance frequently leads to confusion.

For an exact pipe classification under various operating conditions, newer versions of the respective standards (DIN 8077 – 1999 or EN ISO 15874 – 2003) therefore only state the pipe series S or the diameter-wall thickness ratio SDR.

4.3 Requirements on pipe systems

Standards on the various products (for PP-R: EN ISO 15874), as well as the most recent standard on multilayer pipes (DIN EN ISO 21003) have introduced the term "classification of operating conditions".

The requirements made on pipe systems over their operating time according to ISO 15874 have been defined for four classes of application and are indicated in Table 1.

An admissible working pressure of 4 bar, 6 bar, 8 bar or, respectively, 10 bar is valid for each of the different classes of application.

All systems that comply with the conditions as stated in Table 1 must be suitable for conveying cold water at 20 °C and an admissible working pressure of 10 bar over a period of 50 years.

Only water or treated water may be used as heat transmitter in heating systems.

4.3.1 Classification of operational conditions

Class of application according to DIN EN ISO 15874

Table 1

Class of application	Design temperature T_D °C	Duration of operation[a] at T_D years	T_{max} °C	Duration of operation at T_{max} year(s)	T_{max} °C	Duration of operation at T_{times} h	Typical field of application
1[a]	60	49	80	1	95	100	Hot water supply (60 °C)
2[a]	70	49	80	1	95	100	Hot water supply (70 °C)
4[b]	20 Followed by 40 Followed by 60 Followed by (see next column)	2,5 20 25	70 Followed by (see next column)	2.5	100	100	Underfloor heating and low-temperature radiator connection
5[b]	20 Followed by 60 Followed by 80 Followed by (see next column)	14 25 10	90 Followed by (see next column)	1	100	100	High-temperature radiator connection

Annotation: This international standard does not apply, if values that are higher than those stated in the table are taken as a basis for T_D, T_{max} and T_{times}.

[a] Pursuant to national regulations either class 1 or class 2 may be selected.

[b] If more than one design temperature is obtained for a class of application, the respective operating periods should be added up (for example, the universe of temperatures for class 5 and a duration of 50 years consists of the following:
- 20 °C over 14 years, followed by
- 60 °C over 25 years, followed by
- 80 °C over 10 years, followed by
- 90 °C over 1 years, followed by
- 100 °C over 100 h.)

4.3.2 Table of working pressure is exposed

Long-term stress behaviour of POLYMELT pipes with a safety factor of 1.25

Temperature	Years of operation	ECOSAN SDR 6 PP-R		ECOSAN SDR 11 PP-R		ECOSAN ML5 UV ML 5 SDR 7,4 PP-R/Fiber		ECOSAN ML5 SDR 7,4 PP-RCT/Fiber		ECOSAN ML 5 SDR 9 PP-RCT/Fiber		ECOSAN ML 5 SDR 11 PP-RCT/Fiber	
		max. Service pressure											
		bar	psi	bar	psi	bar	psi	bar	psi	bar	psi	bar	psi
20 °C	1	36,0	522	18,0	261	28,5	413	31	450	25,0	363	19,8	287
	5	33,8	490	16,9	245	26,8	389	29,1	422	24,2	351	18,6	270
	10	32,8	476	16,4	238	26,1	379	28,4	412	23,9	347	18,1	263
	25	31,8	461	16,0	232	25,2	366	27,4	397	23,5	341	17,5	254
	50	30,9	448	15,5	225	24,5	355	26,7	387	23,1	335	17,1	248
30 °C	1	30,6	444	15,3	222	24,2	351	26,4	383	21,7	315	16,9	245
	5	28,7	416	14,4	209	22,7	329	24,8	360	20,9	303	15,8	229
	10	27,7	402	13,9	202	22,1	321	24,1	350	20,6	299	15,4	223
	25	26,8	389	13,4	194	21,3	309	23,3	338	20,2	293	14,9	216
	50	26,1	379	13,1	190	20,7	300	22,6	328	19,9	289	14,5	210
40 °C	1	25,8	374	12,9	187	20,6	299	22,5	326	18,6	270	14,4	209
	5	24,2	351	12,1	176	19,2	279	21	305	18,0	261	13,4	194
	10	23,6	342	11,8	171	18,7	271	20,4	296	17,7	257	13	189
	25	22,6	328	11,3	164	18,0	261	19,7	286	17,3	251	12,6	183
	50	22,0	319	11,0	160	17,4	252	19,1	277	17,1	248	12,2	177
50 °C	1	22,0	319	11,0	160	17,4	252	19	276	15,9	231	12,2	177
	5	20,4	296	10,2	148	16,2	235	17,8	258	15,3	222	11,3	164
	10	19,7	286	9,9	144	15,7	228	17,2	250	15,1	219	11	160
	25	19,1	277	9,6	139	15,1	219	16,6	241	14,7	213	10,6	154
	50	18,5	268	9,3	135	14,7	213	16,1	234	14,5	210	10,3	149
60 °C	1	18,5	268	9,3	135	14,7	213	16,1	234	13,5	196	10,2	148
	5	17,2	250	8,6	125	13,6	197	14,9	216	13,0	189	9,5	138
	10	16,6	241	8,3	120	13,2	191	14,5	210	12,7	184	9,2	133
	25	15,9	231	8,0	116	12,7	184	13,9	202	12,4	180	8,9	129
	50	15,3	222	7,7	112	12,3	178	13,5	196	12,2	177	8,6	125
70 °C	1	15,6	226	7,8	113	12,3	178	13,5	196	11,3	164	8,6	125
	5	14,3	207	7,2	104	11,4	165	12,5	181	10,9	158	8	116
	10	14,0	203	7,0	102	11,1	161	12,1	176	10,7	155	7,7	112
	25	12,1	176	6,1	88	9,6	139	11,6	168	10,4	151	7,4	107
	50	10,2	148	5,1	74	8,1	117	11,2	162	10,2	148	7,2	104
80 °C	1	13,1	190	6,5	94	10,3	149	11,3	164	9,5	138	7,2	104
	5	11,5	167	5,7	83	9,1	132	10,4	151	9,0	131	6,7	97
	10	9,6	139	4,8	70	7,7	112	10,1	147	8,9	129	6,4	93
	25	7,6	110	3,8	55	6,2	90	9,6	139	8,6	125	6,1	88
95 °C	1	9,2	133	4,6	67	7,3	106	8,6	125	7,1	103	5,5	80
	5	6,2	90	3,1	45	4,9	71	7,9	115	6,7	97	5	73
	10	5,2	75	2,6	38	4,2	61	7,6	110	6,6	96	4,8	70

Admissible working pressure values for domestic installations (medium: water according to the Drinking Water Ordinance TrinkwV 2001)

SDR = Standard Dimension Ratio (diameter / wall thickness ratio)

This table enables you to select the suitable pipe for your application. You should know the requirements made on the system (temperature, pressure).

Example of how to select a pipe:

Field of application: cold water
Temperature of the medium: 20 °C
Maximum working pressure: 10 bar

Selection:
Step 1: select the applicable temperature range > 20 °C
Step 2: select the required service life > 50 years
Step 3: maximum working pressure within the system 10 bar > pressure according to the table > 15.5 bar >
Selection: **ECOSAN pipe SDR 11**

Field of application: hot water
Temperature of the medium: 70 °C
Maximum working pressure: 10 bar

Selection:
Step 1: select the applicable temperature range > 70 °C
Step 2: select the required service life > 50 years
Step 3: maximum working pressure within the system 10 bar > pressure according to the table > 11.4 bar >
Selection: **ECOSAN ML5 pipe SDR 7.4**

Suggestion: pipe for a maximum working pressure of 10 bar
- cold water 20 °C: ECOSAN SDR 11
- hot water 70 °C: ECOSAN ML5 SDR 7.4

4.3.3 Stress that a pipe system is exposed

When planning and laying pipes, you should always take into account the following interior and exterior stress factors that the pipe system may be exposed to:

Factors:
- **Temperature (from the inside and the outside)**
- **Chemical stress**
- **Pressure (excess and negative)**
- **Extension (tensile and compression load)**
- **Exterior loads from underground laying, traffic and heavy structural components**

4.4 Chemical resistance

Thanks to the special properties of its materials, the ECOSAN installation system features excellent chemical resistance.
Chemical resistance of the ECOSAN fittings with brass inserts cannot be put on a level with the resistance of those system elements that are only made of PP-R.

Metallic copper, manganese or cobalt deteriorate the thermal ageing resistance of PP-R, above all, if the plasticized materials come into contact with these metals. Please contact POLYMELT, if the pipe system is likely to come into contact with chemicals and other aggressive media.

Inquiry regarding the chemical resistance of the ECOSAN pipe system

Installation company:

Firm

Contact person

Street

Postal code/Place

Telephone

Telefax

Building Project

Street

Place

Place, date

Area of application:

Flow medium

°C Service temperature

mbar Service pressure

h/d Running time

Environment

°C Ambient temperature

mbar Ambient pressure

included	not included	**Data Sheets**
☐	☐	flow medium
☐	☐	environment

Send inquiry to: POLYMELT GmbH
Kirnachstraße 17, 87640 Ebenhofen, Germany
Tel. +49 8342 70060
Fax +49 8342 700666
mail@polymelt.com, www.polymelt.com

4.5 Disinfection

4.5.1 Thermal disinfection

In proven cases of contamination, the disinfection of drinking water installations must only be carried out for a limited period of time. Prophylactic disinfection measures do not comply with the minimum quality requirements of the Drinking Water Ordinance. The disinfection of drinking water installations can only be successful, if all sources of contamination have been removed beforehand. The limit values for disinfectant concentration specified in the Drinking Water Ordinance represent maximum values, which were set in accordance with hygienic and toxicological standards. However, no conclusions should be drawn automatically from these values with regard to the resistance of product materials to the disinfectant agents. Only trained specialists may carry out the disinfection of drinking water installations. The disinfection measures must be recorded in writing.

Disinfection measures carried out incorrectly can damage the drinking water installation. A combined thermal-chemical disinfection procedure is not permitted.

The thermal disinfection of POLYMELT pipe systems must be carried out as follows:
- **The water heater and the entire circulation system must be heated to at least 70 °C.**
- **Open all draw-off points in succession or line by line.**
- **Hot water at a temperature of 70 °C must be allowed to run from all draw-off points for at least three minutes.**
- **Do not allow the temperature to drop during the disinfection process.**
- **Do not exceed the maximum temperature of 95 °C.**
- **Take suitable measures to eliminate the risk of scalding.**

The total thermal disinfection time for drinking water installations must not exceed 150 hours per year. Longer disinfection times or excessive temperatures can reduce the service life of the drinking water installation and can damage the system.

It might be necessary to carry out thermal disinfection on a regular basis to stop the growth of legionellae. Legionellae are killed at temperatures higher than 55 °C.

Killing times	at 70 °C	3 min.
	at 60 °C	60–120 min.
	at 55 °C	180–240 min.

To provide sufficient disinfection it must be made sure that a temperature level of more than 70 °C is achieved within the entire system. Provided this type of disinfection is applied on a regular basis and a constant temperature level of more than 65 °C is guaranteed, the PP-RCT is particularly suitable, because of its improved long-term thermal resistance.

4.5.2 Chemical disinfection – "Shock disinfection"

During the process of chemical disinfection ("shock disinfection") in accordance with Pt. 7.5.2 of the ÖNORM-Standard B 5019, the disinfecting agent can be fed into the cold water circulation or the warm water circulation, respectively. When the disinfecting agent is fed into the warm water circulation, the temperature must first be reduced to below 25 °C. Carrying out "shock disinfections" at higher temperatures is not permissible, as premature material damage cannot be ruled out. In relation to the service life of the installed system, the number of disinfecting procedures must not exceed 5 cycles. No drinking water may be drawn either during the disinfection process or during the subsequent flushing of the system with cold water.

Table 3 lists the concentration and contact times of chemicals on the basis of ÖNORM-Standard B 5019.

Table 3

Active component	Chemical formula	Max. concentration applied	Contact time	Max. water temp. in the system
Chlorine Dioxide	ClO_2	6 mg/l as ClO_2	8 to 12 hrs	< 25 °C
Hypochlorite	ClO^-	50 mg/l as $Cl_{2\,(chlorine)}$	8 to 12 hrs	< 25 °C
Permanganate	MnO_4^-	15 mg/l	24 hrs	< 25 °C
Hydrogen Peroxide	H_2O_2	150 mg/l	24 hrs	< 25 °C

Table 3: Concentration and contact times of chemicals for chemical disinfection

During the application the applied concentration and application temperature may not be exceeded at any point within the pipe system.

4.5.3 Continuous metered addition of chemicals – "Permanent disinfection"

The continuous metered addition of chemicals according to Pt. 9 of the ÖNORM-Standard B 5019 is only permissible in instances when repeated decontamination processes (thermal, chemical, according to Section 7 of the ÖNORM-Standard) did not produce the desired results and where the systems in question have low levels of biofilm.
It must be stated that the continuous metered addition of chemicals can in no way replace the structural re- furbishment of the pipe system and should be regarded merely as temporary supporting measure until such a time as the refurbishment takes place, and not as prophylactic measure against Legionella.

If the timeframe and the maximum water temperature are exceeded, damage to the component parts of the pipe systems (pipe, seals, o-rings, etc.) cannot be ruled out. This applies to all prevalent materials used in plumbing technology (types of metal, plastics and elastomers).

Table 4 lists the concentration and contact times of chemicals on the basis of ÖNORM-Standard B 5019.

Table 4

Active component	Chemical formula	Max. concentration applied	Max. period of application	Max. water temp. in the system
Chlorine Dioxide**	ClO_2	0.4 mg/l as ClO_2	4 months	60 °C
Hypochlorite	ClO^-	0.3 mg/l as $Cl_{2\,(chlorine)}$	4 months	60 °C
Chlorine	Cl_2	0.3 mg/l as $Cl_{2\,(chlorine)}$	4 months	60 °C
Chlorine Dioxide**	ClO_2	0.4 mg/l as ClO_2	18 months	< 25 °C
Hypochlorite	ClO^-	0.3 mg/l as $Cl_{2\,(chlorine)}$	18 months	< 25 °C
Chlorine	Cl_2	0.3 mg/l as $Cl_{2\,(chlorine)}$	18 months	< 25 °C

Table 4: Concentration and contact times of chemicals for continuous metered addition

** For the disinfection process using chlorine dioxide (listed as ClO_2) the maximum amount that can be added into the pipe system is 0.4 mg/l ClO_2.

5.1 Dimensioning of drinking water systems

5.1.1 Differentiating calculation procedure

Planning and construction of drinking water installations are based the DIN EN 806 standard or relevant national collateral standards such as DIN 1988-300. These define the procedure used to determine the pipe diameters, which is achieved by calculating the loss of pressure in the pipe system. The pressure loss depends on the pipe length, pipe material, the type of fittings used, as well as the flow rate, which is influenced by the number and size of taps and fittings.

The following data is required to determine pressure losses and pipe diameters:

- **supply pressure or outlet pressure after a pressure-reducing valve or pressure increase**
- **difference in geodetic altitude**
- **pressure loss related to fittings (e.g., water meters, filters, water softening equipment, etc.)**
- **minimum flow pressure at the tapping points**
- **loss of pressure due to the resistance of the pipe materials used**
- **coefficients of losses relating to fittings and connecting elements used**

Below, we introduce a simplified calculation (acc. to EN 806) and a differentiating calculation procedure (acc. to DIN 1988) for the determination of the pipe diameters. The choice of alternative methods allows the selection of the most suitable method for the relevant application. The simplified calculation is recommended for small-scale projects and simple drinking water installations. However, in the interest of hygiene, the differentiating calculation procedure is preferable, in order to ensure the precise calculation and dimensioning of the installation.

The model for the differentiating calculation is illustrated in the process depicted below.

Determine total flow rates and allocate to relevant sections Starting from the farthest tapping point and leading to the supply line, the calculated flow rates are added, and the total flow rates are allocated to the corresponding line sections.	
Determine peak flow rate from the total flow rate To calculate the pipeline system, all draw-off tapping points are generally assigned to their respective calculated flows. Simultaneous water tapping depends on the type of use (e.g. residential or communal systems). Generally, it can be assumed that not all taps will be opened at the same time. For piping installations in residential buildings, the corresponding peak flow rate can be determined using the formula / diagram in DIN 1988 Section 300.	
Determine pressure difference for pipe resistance and individual resistance values.	
Differentiating Calculation Procedure	**Simplified Calculation Procedure**
Determine pressure loss value from individual resistance values via loss correction values	Calculate total pressure loss from pipe resistance of all segments and compare to available pressure difference
Calculate total pressure loss from pipe friction and individual resistance values, and compare to available pressure difference	If necessary, re-calculate using altered pipe diameters
If necessary, re-calculate using altered pipe diameters	

For sound insulation reasons and in order to limit pressure surges, the calculated flow rate must not exceed the values provided below.

Maximum flow rate in accordance with DIN 1988-300

Table 5

Line section		Maximum calculated flow rate for a duration of	
		≤ 15 min	> 15 min
connecting lines		2 m/s	2 m/s
Supply pipes	pipe sections with pipe valve fittings featuring low pressure loss (ζ < 2.5) *	5 m/s	2 m/s
	pipe sections with pipe valve fittings with higher loss coefficient values **	2.5 m/s	2 m/s

* e.g. piston slide valves acc. to DIN 3500, ball valves, slanted seat valves acc. to DIN 3502 (starting from DN 20)
** e.g. shut-off valves acc. to DIN 351

5.1.2 Minimum flow pressures of tapping points

Standard minimum flow pressure values and calculated flow rates for selected drinking water tapping points

Table 6

Type of drinking water tapping point			Calculated flow for outlet of		
			mixed water*		either cold or hot drinking water
Minimum flow pressure p_{min} bar			volume flow cold l/s	volume flow hot l/s	volume flow l/s
0.5	outlet valves without aerator**	DN 15	–	–	0.30
0.5		DN 20	–	–	0.50
0.5		DN 25	–	–	1.00
1.0	outlet valves with aerator	DN 10	–	–	0.15
1.0		DN 15	–	–	0.15
1.0	shower heads for cleaning showers		0.10	0.10	0.20
1.2	pressure flusher according to DIN 3265. part 1	DN 15	–	–	0.70
1.2	pressure flusher according to DIN 3265. part 1	DN 20	–	–	1.00
0.4	pressure flusher according to DIN 3265. part 1	DN 25	–	–	1.00
1.0	pressure flusher for urinals	DN 15	–	–	0.30
1.0	household dishwasher	DN 15	–	–	0.15
1.0	household washing machine	DN 15	–	–	0.25
1.0	mixers for showers	DN 15	0.15	0.15	–
1.0	mixers for bath tubs	DN 15	0.15	0.15	–
1.0	mixers for kitchen sinks	DN 15	0.07	0.07	–
1.0	mixers for wash basins	DN 15	0.07	0.07	–
1.0	mixers for bidets	DN 15	0.07	0.07	–
1.0	mixer	DN 20	0.30	0.30	–
0.5	cistern according to DIN 19542	DN 15	–	–	0.13
1.0	electric water boiler	DN 15	–	–	0.10***

* The calculated flow rates for the supply of mixed water are based on a temperature of 15 °C for cold water and 60 °C for heated drinking water.
** For outlet valves without aerator and with threaded hose connection, the pressure loss in the hose assembly (up to a length of 10 m) and in the connected appliance (e.g. lawn sprinkler) is taken into account as a flat rate minimum flow pressure. In this case, the minimum flow pressure increases by 1.0 bar to 1.5 bar.
*** with fully opened throttle valve.
Annotation: When determining the pipe diameter, draw-off points which are not included in the table as well as valves and fittings of a similar kind with flow rates of fittings or minimum flow pressures that are greater than indicated must be taken into account as per the recommendations of the manufacturer.

5.1.3 Peak flow rate according to DIN 1988

Simultaneous water tapping depends on the type of use (e.g. in residential buildings, hotels, etc.). Generally, it can be assumed that not all connected taps will be fully open at the same time. Consequently, the cumulative flow can be converted into the peak flow rate.

Determination of the peak flow rate V_S from the total flow rate $\Sigma\ V_R$

Diagram:

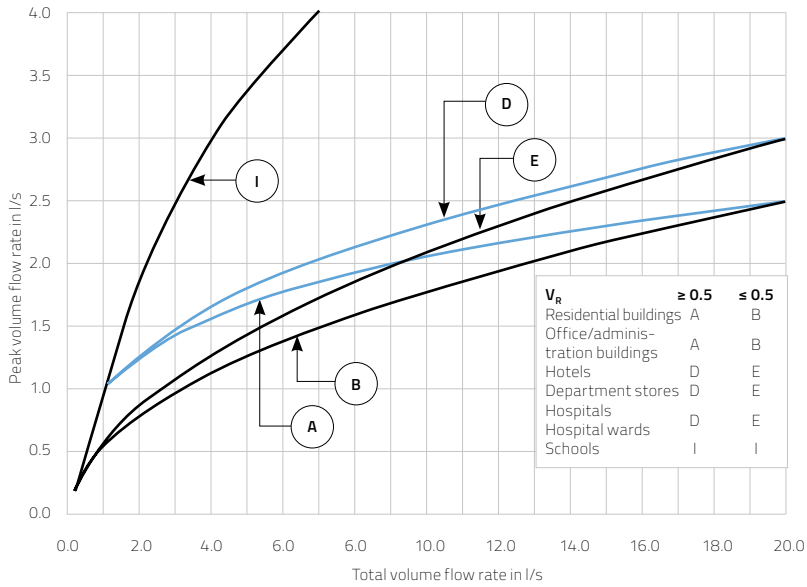

Table 7:

Values in l/s for residential buildings, offices / administration buildings with an assumed calculated flow rate of the tapping point V_R < 0.5 l/s

Table 7

$S\ V_R$	V_S	$S\ V_R$	V_S	$S\ V_R$	V_S	$S\ V_R$	V_S	$S\ V_R$	V_S	$S\ V_R$	V_S	$S\ V_R$	V_S	$S\ V_R$	V_S
0.02	0.02	1.02	0.55	2.02	0.80	3.02	0.98	4.02	1.14	5.10	1.28	10.10	1.79	15.10	2.17
0.04	0.04	1.04	0.55	2.04	0.80	3.04	0.98	4.04	1.14	5.20	1.29	10.20	1.80	15.20	2.18
0.06	0.06	1.06	0.56	2.06	0.80	3.06	0.99	4.06	1.14	5.30	1.30	10.30	1.81	15.30	2.19
0.08	0.08	1.08	0.57	2.08	0.81	3.08	0.99	4.08	1.14	5.40	1.32	10.40	1.82	15.40	2.19
0.10	0.10	1.10	0.57	2.10	0.81	3.10	0.99	4.10	1.15	5.50	1.33	10.50	1.82	15.50	2.20
0.12	0.12	1.12	0.58	2.12	0.82	3.12	1.00	4.12	1.15	5.60	1.34	10.60	1.83	15.60	2.21
0.14	0.14	1.14	0.58	2.14	0.82	3.14	1.00	4.14	1.15	5.70	1.35	10.70	1.84	15.70	2.21
0.16	0.16	1.16	0.59	2.16	0.82	3.16	1.00	4.16	1.16	5.80	1.36	10.80	1.85	15.80	2.22
0.18	0.18	1.18	0.59	2.18	0.83	3.18	1.01	4.18	1.16	5.90	1.38	10.90	1.86	15.90	2.23
0.20	0.19	1.20	0.60	2.20	0.83	3.20	1.01	4.20	1.16	6.00	1.39	11.00	1.87	16.00	2.23
0.22	0.21	1.22	0.61	2.22	0.84	3.22	1.01	4.22	1.16	6.10	1.40	11.10	1.87	16.10	2.24
0.24	0.22	1.24	0.61	2.24	0.84	3.24	1.02	4.24	1.17	6.20	1.41	11.20	1.88	16.20	2.25
0.26	0.23	1.26	0.62	2.26	0.84	3.26	1.02	4.26	1.17	6.30	1.42	11.30	1.89	16.30	2.25
0.28	0.24	1.28	0.62	2.28	0.85	3.28	1.02	4.28	1.17	6.40	1.43	11.40	1.90	16.40	2.26
0.30	0.26	1.30	0.63	2.30	0.85	3.30	1.03	4.30	1.17	6.50	1.44	11.50	1.91	16.50	2.27
0.32	0.27	1.32	0.63	2.32	0.86	3.32	1.03	4.32	1.18	6.60	1.45	11.60	1.91	16.60	2.27
0.34	0.28	1.34	0.64	2.34	0.86	3.34	1.03	4.34	1.18	6.70	1.47	11.70	1.92	16.70	2.28
0.36	0.29	1.36	0.64	2.36	0.86	3.36	1.04	4.36	1.18	6.80	1.48	11.80	1.93	16.80	2.29
0.38	0.30	1.38	0.65	2.38	0.87	3.38	1.04	4.38	1.19	6.90	1.49	11.90	1.94	16.90	2.29
0.40	0.31	1.40	0.65	2.40	0.87	3.40	1.04	4.40	1.19	7.00	1.50	12.00	1.95	17.00	2.30
0.42	0.32	1.42	0.66	2.42	0.88	3.42	1.05	4.42	1.19	7.10	1.51	12.10	1.95	17.10	2.31
0.44	0.33	1.44	0.66	2.44	0.88	3.44	1.05	4.44	1.19	7.20	1.52	12.20	1.96	17.20	2.31
0.46	0.34	1.46	0.67	2.46	0.88	3.46	1.05	4.46	1.20	7.30	1.53	12.30	1.97	17.30	2.32
0.48	0.35	1.48	0.67	2.48	0.89	3.48	1.06	4.48	1.20	7.40	1.54	12.40	1.98	17.40	2.33
0.50	0.36	1.50	0.68	2.50	0.89	3.50	1.06	4.50	1.20	7.50	1.55	12.50	1.99	17.50	2.33
0.52	0.37	1.52	0.68	2.52	0.89	3.52	1.06	4.52	1.20	7.60	1.56	12.60	1.99	17.60	2.34
0.54	0.38	1.54	0.69	2.54	0.90	3.54	1.06	4.54	1.21	7.70	1.57	12.70	2.00	17.70	2.35
0.56	0.39	1.56	0.69	2.56	0.90	3.56	1.07	4.56	1.21	7.80	1.58	12.80	2.01	17.80	2.35
0.58	0.39	1.58	0.70	2.58	0.90	3.58	1.07	4.58	1.21	7.90	1.59	12.90	2.02	17.90	2.36
0.60	0.40	1.60	0.70	2.60	0.91	3.60	1.07	4.60	1.22	8.00	1.60	13.00	2.02	18.00	2.36
0.62	0.41	1.62	0.71	2.62	0.91	3.62	1.08	4.62	1.22	8.10	1.61	13.10	2.03	18.10	2.37
0.64	0.42	1.64	0.71	2.64	0.92	3.64	1.08	4.64	1.22	8.20	1.62	13.20	2.04	18.20	2.38
0.66	0.43	1.66	0.72	2.66	0.92	3.66	1.08	4.66	1.22	8.30	1.63	13.30	2.05	18.30	2.38
0.68	0.43	1.68	0.72	2.68	0.92	3.68	1.09	4.68	1.23	8.40	1.64	13.40	2.05	18.40	2.39
0.70	0.44	1.70	0.73	2.70	0.93	3.70	1.09	4.70	1.23	8.50	1.65	13.50	2.06	18.50	2.40
0.72	0.45	1.72	0.73	2.72	0.93	3.72	1.09	4.72	1.23	8.60	1.66	13.60	2.07	18.60	2.40
0.74	0.46	1.74	0.74	2.74	0.93	3.74	1.09	4.74	1.23	8.70	1.67	13.70	2.07	18.70	2.41
0.76	0.46	1.76	0.74	2.76	0.94	3.76	1.10	4.76	1.24	8.80	1.67	13.80	2.08	18.80	2.41
0.78	0.47	1.78	0.74	2.78	0.94	3.78	1.10	4.78	1.24	8.90	1.68	13.90	2.09	18.90	2.42
0.80	0.48	1.80	0.75	2.80	0.94	3.80	1.10	4.80	1.24	9.00	1.69	14.00	2.10	19.00	2.43
0.82	0.48	1.82	0.75	2.82	0.95	3.82	1.11	4.82	1.24	9.10	1.70	14.10	2.10	19.10	2.43
0.84	0.49	1.84	0.76	2.84	0.95	3.84	1.11	4.84	1.25	9.20	1.71	14.20	2.11	19.20	2.44
0.86	0.50	1.86	0.76	2.86	0.95	3.86	1.11	4.86	1.25	9.30	1.72	14.30	2.12	19.30	2.44
0.88	0.50	1.88	0.77	2.88	0.96	3.88	1.12	4.88	1.25	9.40	1.73	14.40	2.12	19.40	2.45
0.90	0.51	1.90	0.77	2.90	0.96	3.90	1.12	4.90	1.25	9.50	1.74	14.50	2.13	19.50	2.46
0.92	0.52	1.92	0.77	2.92	0.96	3.92	1.12	4.92	1.26	9.60	1.75	14.60	2.14	19.60	2.46
0.94	0.52	1.94	0.78	2.94	0.97	3.94	1.12	4.94	1.26	9.70	1.76	14.70	2.15	19.70	2.47
0.96	0.53	1.96	0.78	2.96	0.97	3.96	1.13	4.96	1.26	9.80	1.76	14.80	2.15	19.80	2.47
0.98	0.54	1.98	0.79	2.98	0.97	3.98	1.13	4.98	1.26	9.90	1.77	14.90	2.16	19.90	2.48
1.00	0.54	2.00	0.79	3.00	0.98	4.00	1.13	5.00	1.27	10.00	1.78	15.00	2.17	20.00	2.49

5.1.4 Single resistance values ζ

Coefficient of resistance values for fittings made of PP-R

Table 8

Fitting Individual resistance	Graphic symbol	Remark	Resistance coefficient value ζ
Tee		branching, dividing flow	1.3
		passage for dividing flow	0.3
		counter current for dividing flow	1.4
		branching, merging flow	1.3
	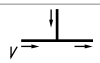	passage for merging flow	2.5
		counter current for merging flow	3.0
Elbow 90°			1.2
Elbow 45°			0.7
Socket			0.25
Reducer		by 1 dimension	0.4
		by 2 dimensions	0.6
		by 3 dimensions	0.7
		more than 4 dimensions	0.9
Wall union			1.7
Double wall union			1.5
Short cross over			1.9
Transition with internal thread			0.5
Transition with internal thread, reduced			0.8
Transition with external thread			0.4
Transition with external thread, reduced			0.8
Transition elbow with thread			1.7
Tee with transition, dividing flow	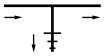		1.6
Slanted seat valve			3.0
Slanted seat valve with back-flow prevention			3.8
Shut-off valve			7.0
Ball valve			0.4

5.1.5 Pressure loss tables

Pressure loss due to pipe resistance R and flow rate v depending on flow V

Pipe SDR 6

Temperature 20 °C Roughness: 0.007 mm Density: 998.29 kg/m³ Kin. viscosity: 1.004E-06 m²/s

		Dimension	16 mm	20 mm	25 mm	32 mm	40 mm	50 mm	63 mm	75 mm	90 mm	110 mm	125 mm
		Wall thickness	2.7 mm	3.4 mm	4.2 mm	5.4 mm	6.7 mm	8.3 mm	10.5 mm	12.5 mm	15.0 mm	18.3 mm	20.8 mm
l/s	m³/h												
0.01	0.04	R in mbar/m	0.41	0.15	0.05	0.02	0.01						
		v in m/s	0.11	0.07	0.05	0.03	0.02						
0.02	0.07	R	1.24	0.45	0.16	0.05	0.02	0.01					
		v	0.23	0.15	0.09	0.06	0.04	0.02					
0.03	0.11	R	2.41	0.87	0.30	0.10	0.03	0.01					
		v	0.34	0.22	0.14	0.08	0.05	0.03					
0.04	0.14	R	3.89	1.39	0.48	0.15	0.05	0.02	0.01				
		v	0.45	0.29	0.18	0.11	0.07	0.05	0.03				
0.05	0.18	R	5.66	2.02	0.69	0.22	0.08	0.03	0.01				
		v	0.57	0.37	0.23	0.14	0.09	0.06	0.04				
0.06	0.22	R	7.70	2.74	0.94	0.30	0.10	0.04	0.01	0.01			
		v	0.68	0.44	0.28	0.17	0.11	0.07	0.04	0.03			
0.07	0.25	R	10.02	3.55	1.21	0.39	0.13	0.05	0.02	0.01			
		v	0.79	0.51	0.32	0.20	0.13	0.08	0.05	0.04			
0.08	0.29	R	12.59	4.46	1.51	0.48	0.17	0.06	0.02	0.01			
		v	0.91	0.58	0.37	0.23	0.14	0.09	0.06	0.04			
0.09	0.32	R	15.43	5.45	1.85	0.59	0.20	0.07	0.02	0.01			
		v	1.02	0.66	0.42	0.25	0.16	0.10	0.06	0.05			
0.10	0.36	R	18.52	6.52	2.21	0.70	0.24	0.08	0.03	0.01	0.01		
		v	1.13	0.73	0.46	0.28	0.18	0.11	0.07	0.05	0.04		
0.12	0.43	R	25.44	8.92	3.01	0.95	0.33	0.11	0.04	0.02	0.01		
		v	1.36	0.88	0.55	0.34	0.22	0.14	0.09	0.06	0.04		
0.14	0.50	R	33.33	11.66	3.92	1.23	0.42	0.15	0.05	0.02	0.01		
		v	1.59	1.02	0.65	0.40	0.25	0.16	0.10	0.07	0.05		
0.16	0.58	R	42.17	14.71	4.93	1.55	0.53	0.18	0.06	0.03	0.01		
		v	1.81	1.17	0.74	0.45	0.29	0.18	0.12	0.08	0.06		
0.18	0.65	R	51.96	18.07	6.05	1.89	0.65	0.22	0.08	0.03	0.01	0.01	
		v	2.04	1.32	0.83	0.51	0.32	0.21	0.13	0.09	0.06	0.04	
0.20	0.72	R	62.68	21.75	7.26	2.27	0.78	0.27	0.09	0.04	0.02	0.01	
		v	2.27	1.46	0.92	0.57	0.36	0.23	0.14	0.10	0.07	0.05	
0.30	1.08	R	129.98	44.65	14.77	4.58	1.56	0.53	0.18	0.08	0.03	0.01	0.01
		v	3.40	2.19	1.39	0.85	0.54	0.34	0.22	0.15	0.11	0.07	0.05
0.40	1.44	R	219.69	74.89	24.60	7.58	2.56	0.87	0.29	0.13	0.05	0.02	0.01
		v	4.53	2.92	1.85	1.13	0.72	0.46	0.29	0.20	0.14	0.09	0.07
0.50	1.80	R	331.49	112.32	36.68	11.24	3.78	1.28	0.43	0.19	0.08	0.03	0.02
		v	5.67	3.65	2.31	1.42	0.90	0.57	0.36	0.25	0.18	0.12	0.09
0.60	2.16	R	465.18	156.82	50.97	15.55	5.21	1.76	0.59	0.26	0.11	0.04	0.02
		v	6.80	4.38	2.77	1.70	1.08	0.68	0.43	0.31	0.21	0.14	0.11
0.70	2.52	R	620.65	208.34	67.43	20.49	6.85	2.30	0.77	0.34	0.14	0.05	0.03
		v	7.93	5.12	3.23	1.98	1.26	0.80	0.51	0.36	0.25	0.17	0.13
0.80	2.88	R	797.84	266.84	86.05	26.05	8.68	2.91	0.97	0.42	0.18	0.07	0.04
		v	9.07	5.85	3.70	2.27	1.44	0.91	0.58	0.41	0.28	0.19	0.15
0.90	3.24	R	996.69	332.29	106.80	32.22	10.72	3.58	1.20	0.52	0.22	0.08	0.05
		v	10.20	6.58	4.16	2.55	1.62	1.03	0.65	0.46	0.32	0.21	0.16
1.00	3.60	R		404.65	129.67	39.01	12.94	4.32	1.44	0.63	0.26	0.10	0.06
		v		7.31	4.62	2.83	1.80	1.14	0.72	0.51	0.35	0.24	0.18
1.10	3.96	R		483.92	154.66	46.40	15.36	5.11	1.70	0.74	0.31	0.12	0.07
		v		8.04	5.08	3.12	1.98	1.26	0.79	0.56	0.39	0.26	0.20
1.20	4.32	R		570.09	181.75	54.40	17.97	5.97	1.98	0.86	0.36	0.14	0.08
		v		8.77	5.54	3.40	2.16	1.37	0.87	0.61	0.42	0.28	0.22
1.30	4.68	R		663.13	210.95	62.99	20.77	6.89	2.29	0.99	0.42	0.16	0.09
		v		9.50	6.01	3.68	2.34	1.48	0.94	0.66	0.46	0.31	0.24
1.40	5.04	R		763.06	242.24	72.18	23.75	7.86	2.61	1.13	0.47	0.18	0.10
		v		10.23	6.47	3.97	2.52	1.60	1.01	0.71	0.50	0.33	0.26
1.60	5.76	R			311.09	92.33	30.28	10.00	3.31	1.43	0.60	0.23	0.12
		v			7.39	4.53	2.88	1.83	1.15	0.81	0.57	0.38	0.29
1.80	6.48	R			388.29	114.85	37.56	12.37	4.08	1.76	0.74	0.28	0.15
		v			8.32	5.10	3.24	2.05	1.30	0.92	0.64	0.43	0.33
2.00	7.20	R			473.81	139.72	45.56	14.97	4.93	2.13	0.89	0.34	0.18
		v			9.24	5.67	3.60	2.28	1.44	1.02	0.71	0.47	0.37
2.20	7.92	R			567.64	166.93	54.30	17.80	5.85	2.52	1.05	0.40	0.22
		v			10.17	6.23	3.96	2.51	1.59	1.12	0.78	0.52	0.40
2.40	8.64	R				196.48	63.77	20.85	6.84	2.94	1.22	0.47	0.25
		v				6.80	4.32	2.74	1.73	1.22	0.85	0.57	0.44

Table 9

PLANNING AND DESIGN

		Dimension	16 mm	20 mm	25 mm	32 mm	40 mm	50 mm	63 mm	75 mm	90 mm	110 mm	125 mm
		Wall thickness	2.7 mm	3.4 mm	4.2 mm	5.4 mm	6.7 mm	8.3 mm	10.5 mm	12.5 mm	15.0 mm	18.3 mm	20.8 mm
l/s	m³/h												
2.60	9.36	R				228.36	73.96	24.14	7.90	3.40	1.41	0.54	0.29
		v				7.37	4.68	2.97	1.88	1.32	0.92	0.61	0.48
2.80	10.08	R				262.57	84.87	27.65	9.04	3.88	1.61	0.61	0.33
		v				7.93	5.04	3.20	2.02	1.43	0.99	0.66	0.51
3.00	10.80	R				299.11	96.51	31.38	10.24	4.39	1.82	0.69	0.38
		v				8.50	5.40	3.42	2.17	1.53	1.06	0.71	0.55
3.50	12.60	R				400.59	128.74	41.70	13.56	5.80	2.40	0.91	0.49
		v				9.92	6.30	3.99	2.53	1.78	1.24	0.83	0.64
4.00	14.40	R				516.57	165.44	53.41	17.31	7.39	3.05	1.15	0.62
		v				11.33	7.20	4.57	2.89	2.04	1.41	0.95	0.73
4.50	16.20	R					206.60	66.50	21.49	9.16	3.78	1.42	0.77
		v					8.10	5.14	3.25	2.29	1.59	1.06	0.82
5.00	18.00	R					252.22	80.96	26.09	11.10	4.57	1.72	0.93
		v					9.00	5.71	3.61	2.55	1.77	1.18	0.92
5.50	19.80	R					302.28	96.79	31.12	13.22	5.43	2.04	1.10
		v					9.90	6.28	3.97	2.80	1.95	1.30	1.01
6.00	21.60	R					356.78	113.99	36.57	15.51	6.36	2.39	1.29
		v					10.80	6.85	4.33	3.06	2.12	1.42	1.10
6.50	23.40	R						132.56	42.44	17.97	7.36	2.76	1.49
		v						7.42	4.69	3.31	2.30	1.54	1.19
7.00	25.20	R						152.49	48.73	20.61	8.43	3.16	1.70
		v						7.99	5.05	3.57	2.48	1.65	1.28
7.50	27.00	R						173.78	55.44	23.42	9.57	3.58	1.93
		v						8.56	5.41	3.82	2.65	1.77	1.37
8.00	28.80	R						196.43	62.57	26.39	10.77	4.03	2.17
		v						9.13	5.77	4.07	2.83	1.89	1.46
8.50	30.60	R						220.43	70.11	29.54	12.04	4.50	2.42
		v						9.70	6.14	4.33	3.01	2.01	1.56
9.00	32.40	R						245.80	78.06	32.86	13.38	4.99	2.68
		v						10.27	6.50	4.58	3.18	2.13	1.65
9.50	34.20	R							86.43	36.34	14.79	5.51	2.96
		v							6.86	4.84	3.36	2.25	1.74
10.00	36.00	R							95.22	40.00	16.26	6.05	3.25
		v							7.22	5.09	3.54	2.36	1.83
10.50	37.80	R							104.42	43.82	17.80	6.62	3.55
		v							7.58	5.35	3.71	2.48	1.92
11.00	39.60	R							114.03	47.82	19.40	7.21	3.87
		v							7.94	5.60	3.89	2.60	2.01
11.50	41.40	R							124.06	51.98	21.07	7.83	4.19
		v							8.30	5.86	4.07	2.72	2.11
12.00	43.20	R							134.49	56.31	22.81	8.46	4.53
		v							8.66	6.11	4.24	2.84	2.20
12.50	45.00	R							145.34	60.80	24.61	9.12	4.88
		v							9.02	6.37	4.42	2.95	2.29
13.00	46.80	R							156.61	65.47	26.48	9.81	5.25
		v							9.38	6.62	4.60	3.07	2.38
13.50	48.60	R							168.28	70.30	28.41	10.52	5.62
		v							9.74	6.88	4.77	3.19	2.47
14.00	50.40	R							180.37	75.30	30.41	11.25	6.01
		v							10.11	7.13	4.95	3.31	2.56
14.50	52.20	R								80.47	32.48	12.00	6.41
		v								7.38	5.13	3.43	2.65
15.00	54.00	R								85.80	34.61	12.78	6.83
		v								7.64	5.31	3.54	2.75
16.00	57.60	R								96.97	39.06	14.41	7.69
		v								8.15	5.66	3.78	2.93
17.00	61.20	R								108.80	43.78	16.13	8.60
		v								8.66	6.01	4.02	3.11
18.00	64.80	R								121.31	48.76	17.94	9.56
		v								9.17	6.37	4.25	3.29
19.00	68.40	R								134.47	54.00	19.85	10.57
		v								9.68	6.72	4.49	3.48
20.00	72.00	R								148.31	59.49	21.84	11.63
		v								10.19	7.07	4.73	3.66
21.00	75.60	R									65.25	23.93	12.73
		v									7.43	4.96	3.84
22.00	79.20	R									71.27	26.12	13.88
		v									7.78	5.20	4.03
23.00	82.80	R									77.54	28.39	15.08
		v									8.13	5.44	4.21
24.00	86.40	R									84.08	30.75	16.33
		v									8.49	5.67	4.39
25.00	90.00	R									90.87	33.21	17.63
		v									8.84	5.91	4.58

Pressure loss due to pipe resistance R and flow rate v depending on flow V

Pipes SDR 7,4

Temperature 20 °C Roughness: 0.007 mm Density: 998.29 kg/m³ Kin. viscosity: 1.004E-06 m²/s

		Dimension	16 mm	20 mm	25 mm	32 mm	40 mm	50 mm	63 mm	75 mm	90 mm	110 mm	125 mm	160 mm	200 mm	250 mm
		Wall thickness	2.2 mm	2.8 mm	3.5 mm	4.4 mm	5.5 mm	6.9 mm	8.6 mm	10.3 mm	12.3 mm	15.1 mm	17.1 mm	21.6 mm	27.4 mm	34.2 mm
l/s	m³/h															
0.01	0.04	R in mbar/m	0.27	0.10	0.04	0.01										
		v in m/s	0.09	0.06	0.04	0.02										
0.02	0.07	R	0.82	0.30	0.11	0.03	0.01									
		v	0.19	0.12	0.08	0.05	0.03									
0.03	0.11	R	1.58	0.58	0.21	0.06	0.02									
		v	0.28	0.18	0.12	0.07	0.05									
0.04	0.14	R	2.55	0.93	0.33	0.10	0.04	0.01								
		v	0.38	0.25	0.16	0.09	0.06	0.04								
0.05	0.18	R	3.70	1.34	0.47	0.15	0.05	0.02								
		v	0.47	0.31	0.20	0.12	0.08	0.05								
0.06	0.22	R	5.03	1.82	0.64	0.20	0.07	0.03	0.01							
		v	0.57	0.37	0.24	0.14	0.09	0.06	0.04							
0.07	0.25	R	6.54	2.36	0.83	0.25	0.09	0.03	0.01							
		v	0.66	0.43	0.28	0.17	0.11	0.07	0.04							
0.08	0.29	R	8.21	2.96	1.04	0.32	0.11	0.04	0.01							
		v	0.76	0.49	0.31	0.19	0.12	0.08	0.05							
0.09	0.32	R	10.05	3.61	1.26	0.38	0.14	0.05	0.02							
		v	0.85	0.55	0.35	0.21	0.14	0.09	0.05							
0.10	0.36	R	12.05	4.32	1.51	0.46	0.16	0.06	0.02	0.01						
		v	0.95	0.61	0.39	0.24	0.15	0.10	0.06	0.04						
0.12	0.43	R	16.52	5.90	2.05	0.62	0.22	0.08	0.03	0.01						
		v	1.14	0.74	0.47	0.28	0.18	0.12	0.07	0.05						
0.14	0.50	R	21.62	7.70	2.67	0.81	0.28	0.10	0.03	0.02						
		v	1.32	0.86	0.55	0.33	0.21	0.14	0.08	0.06						
0.16	0.58	R	27.33	9.70	3.36	1.01	0.35	0.13	0.04	0.02						
		v	1.51	0.98	0.63	0.38	0.24	0.16	0.10	0.07						
0.18	0.65	R	33.63	11.91	4.11	1.24	0.43	0.15	0.05	0.02	0.01					
		v	1.70	1.11	0.71	0.43	0.27	0.17	0.11	0.08	0.05					
0.20	0.72	R	40.52	14.32	4.94	1.48	0.52	0.18	0.06	0.03	0.01					
		v	1.89	1.23	0.79	0.47	0.30	0.19	0.12	0.09	0.06					
0.30	1.08	R	83.68	29.30	10.01	2.98	1.03	0.36	0.12	0.05	0.02	0.01				
		v	2.84	1.84	1.18	0.71	0.45	0.29	0.18	0.13	0.09	0.06				
0.40	1.44	R	140.98	49.02	16.64	4.92	1.70	0.59	0.20	0.09	0.04	0.01	0.01			
		v	3.78	2.46	1.57	0.95	0.61	0.39	0.24	0.17	0.12	0.08	0.06			
0.50	1.80	R	212.17	73.35	24.77	7.29	2.50	0.87	0.29	0.13	0.05	0.02	0.01			
		v	4.73	3.07	1.96	1.18	0.76	0.49	0.30	0.22	0.15	0.10	0.08			
0.60	2.16	R	297.12	102.21	34.36	10.06	3.45	1.20	0.39	0.17	0.07	0.03	0.02			
		v	5.68	3.68	2.36	1.42	0.91	0.58	0.36	0.26	0.18	0.12	0.09			
0.70	2.52	R	395.72	135.57	45.40	13.24	4.52	1.57	0.51	0.23	0.09	0.04	0.02	0.01		
		v	6.62	4.30	2.75	1.66	1.06	0.68	0.42	0.30	0.21	0.14	0.11	0.07		
0.80	2.88	R	507.93	173.38	57.86	16.82	5.73	1.98	0.64	0.28	0.12	0.05	0.03	0.01		
		v	7.57	4.91	3.14	1.89	1.21	0.78	0.49	0.34	0.24	0.16	0.12	0.07		
0.90	3.24	R	633.70	215.63	71.73	20.78	7.06	2.43	0.79	0.35	0.15	0.06	0.03	0.01		
		v	8.52	5.53	3.54	2.13	1.36	0.87	0.55	0.39	0.27	0.18	0.14	0.08		
1.00	3.60	R	773.00	262.30	87.00	25.14	8.52	2.93	0.95	0.42	0.17	0.07	0.04	0.01		
		v	9.46	6.14	3.93	2.37	1.51	0.97	0.61	0.43	0.30	0.20	0.15	0.09		
1.10	3.96	R	925.81	313.36	103.67	29.87	10.11	3.47	1.12	0.49	0.21	0.08	0.04	0.01		
		v	10.41	6.75	4.32	2.60	1.67	1.07	0.67	0.47	0.33	0.22	0.17	0.10		
1.20	4.32	R		368.81	121.73	34.99	11.82	4.05	1.31	0.58	0.24	0.09	0.05	0.02	0.01	
		v		7.37	4.72	2.84	1.82	1.17	0.73	0.52	0.36	0.24	0.19	0.11	0.07	
1.30	4.68	R		428.65	141.17	40.48	13.65	4.67	1.51	0.66	0.28	0.11	0.06	0.02	0.01	
		v		7.98	5.11	3.08	1.97	1.26	0.79	0.56	0.39	0.26	0.20	0.12	0.08	
1.40	5.04	R		492.86	162.00	46.35	15.60	5.33	1.72	0.76	0.31	0.12	0.07	0.02	0.01	
		v		8.60	5.50	3.31	2.12	1.36	0.85	0.60	0.42	0.28	0.22	0.13	0.08	
1.60	5.76	R		634.39	207.77	59.21	19.86	6.77	2.18	0.96	0.40	0.15	0.08	0.03	0.01	
		v		9.82	6.29	3.78	2.42	1.55	0.97	0.69	0.48	0.32	0.25	0.15	0.10	
1.80	6.48	R		793.36	259.03	73.57	24.61	8.37	2.69	1.18	0.49	0.19	0.10	0.03	0.01	
		v		11.05	7.07	4.26	2.73	1.75	1.09	0.77	0.54	0.36	0.28	0.17	0.11	
2.00	7.20	R			315.77	89.40	29.83	10.12	3.24	1.42	0.59	0.23	0.12	0.04	0.01	
		v			7.86	4.73	3.03	1.94	1.21	0.86	0.60	0.40	0.31	0.19	0.12	
2.20	7.92	R			377.96	106.70	35.52	12.02	3.85	1.68	0.69	0.27	0.14	0.04	0.02	0.01
		v			8.65	5.20	3.33	2.14	1.34	0.95	0.65	0.44	0.34	0.21	0.13	0.08
2.40	8.64	R			445.60	125.47	41.67	14.08	4.50	1.96	0.81	0.31	0.17	0.05	0.02	0.01
		v			9.43	5.68	3.63	2.33	1.46	1.03	0.71	0.48	0.37	0.22	0.14	0.09
2.60	9.36	R			518.69	145.71	48.30	16.29	5.19	2.26	0.93	0.36	0.19	0.06	0.02	0.01
		v			10.22	6.15	3.94	2.53	1.58	1.12	0.77	0.52	0.40	0.24	0.16	0.10

Table 10

PLANNING AND DESIGN

		Dimension	16 mm	20 mm	25 mm	32 mm	40 mm	50 mm	63 mm	75 mm	90 mm	110 mm	125 mm	160 mm	200 mm	250 mm
		Wall thickness	2.2 mm	2.8 mm	3.5 mm	4.4 mm	5.5 mm	6.9 mm	8.6 mm	10.3 mm	12.3 mm	15.1 mm	17.1 mm	21.6 mm	27.4 mm	34.2 mm
l/s	m³/h															
2.80	10.08	R				167.40	55.38	18.64	5.93	2.58	1.06	0.41	0.22	0.07	0.02	0.01
		v				6.62	4.24	2.72	1.70	1.20	0.83	0.56	0.43	0.26	0.17	0.11
3.00	10.80	R				190.56	62.93	21.15	6.72	2.92	1.20	0.46	0.25	0.08	0.03	0.01
		v				7.10	4.54	2.91	1.82	1.29	0.89	0.60	0.46	0.28	0.18	0.12
3.50	12.60	R				254.82	83.82	28.07	8.89	3.86	1.58	0.61	0.33	0.10	0.03	0.01
		v				8.28	5.30	3.40	2.12	1.51	1.04	0.70	0.54	0.33	0.21	0.14
4.00	14.40	R				328.14	107.58	35.90	11.33	4.91	2.01	0.77	0.42	0.12	0.04	0.02
		v				9.46	6.06	3.89	2.43	1.72	1.19	0.80	0.62	0.37	0.24	0.15
4.50	16.20	R				410.53	134.19	44.65	14.06	6.07	2.49	0.95	0.51	0.15	0.05	0.02
		v				10.65	6.81	4.37	2.73	1.94	1.34	0.90	0.69	0.42	0.27	0.17
5.00	18.00	R					163.65	54.32	17.05	7.36	3.01	1.15	0.62	0.18	0.07	0.02
		v					7.57	4.86	3.03	2.15	1.49	1.00	0.77	0.47	0.30	0.19
5.50	19.80	R					195.95	64.88	20.32	8.75	3.57	1.36	0.73	0.22	0.08	0.03
		v					8.33	5.34	3.34	2.37	1.64	1.10	0.85	0.51	0.33	0.21
6.00	21.60	R					231.09	76.36	23.86	10.26	4.18	1.60	0.86	0.26	0.09	0.03
		v					9.08	5.83	3.64	2.58	1.79	1.20	0.93	0.56	0.36	0.23
6.50	23.40	R					269.06	88.73	27.68	11.89	4.84	1.84	0.99	0.29	0.10	0.04
		v					9.84	6.32	3.95	2.80	1.93	1.30	1.00	0.61	0.39	0.25
7.00	25.20	R					309.86	102.00	31.76	13.62	5.54	2.11	1.13	0.34	0.12	0.04
		v					10.60	6.80	4.25	3.01	2.08	1.40	1.08	0.65	0.42	0.27
7.50	27.00	R						116.17	36.10	15.47	6.28	2.39	1.28	0.38	0.13	0.05
		v						7.29	4.55	3.23	2.23	1.50	1.16	0.70	0.45	0.29
8.00	28.80	R						131.24	40.72	17.42	7.07	2.68	1.44	0.43	0.15	0.05
		v						7.77	4.86	3.44	2.38	1.60	1.24	0.75	0.48	0.31
8.50	30.60	R						147.20	45.60	19.49	7.90	3.00	1.60	0.48	0.17	0.06
		v						8.26	5.16	3.66	2.53	1.70	1.31	0.79	0.51	0.33
9.00	32.40	R						164.05	50.75	21.67	8.77	3.32	1.78	0.53	0.18	0.06
		v						8.74	5.46	3.87	2.68	1.80	1.39	0.84	0.54	0.35
9.50	34.20	R						181.80	56.16	23.96	9.69	3.67	1.96	0.58	0.20	0.07
		v						9.23	5.77	4.09	2.83	1.90	1.47	0.89	0.57	0.37
10.00	36.00	R						200.45	61.84	26.35	10.65	4.03	2.15	0.64	0.22	0.08
		v						9.72	6.07	4.30	2.98	2.00	1.54	0.93	0.60	0.39
10.50	37.80	R						219.98	67.78	28.86	11.65	4.40	2.35	0.69	0.24	0.08
		v						10.20	6.37	4.52	3.13	2.10	1.62	0.98	0.63	0.41
11.00	39.60	R							73.99	31.48	12.70	4.79	2.56	0.76	0.26	0.09
		v							6.68	4.73	3.27	2.20	1.70	1.03	0.66	0.42
11.50	41.40	R							80.46	34.20	13.78	5.20	2.77	0.82	0.29	0.10
		v							6.98	4.95	3.42	2.30	1.78	1.07	0.69	0.44
12.00	43.20	R							87.20	37.04	14.91	5.62	3.00	0.88	0.31	0.11
		v							7.28	5.16	3.57	2.40	1.85	1.12	0.72	0.46
12.50	45.00	R							94.20	39.98	16.09	6.06	3.23	0.95	0.33	0.11
		v							7.59	5.38	3.72	2.50	1.93	1.17	0.75	0.48
13.00	46.80	R							101.46	43.03	17.30	6.51	3.47	1.02	0.36	0.12
		v							7.89	5.59	3.87	2.60	2.01	1.21	0.79	0.50
13.50	48.60	R							108.99	46.19	18.56	6.98	3.71	1.09	0.38	0.13
		v							8.19	5.81	4.02	2.70	2.08	1.26	0.82	0.52
14.00	50.40	R							116.78	49.46	19.86	7.46	3.97	1.17	0.41	0.14
		v							8.50	6.02	4.17	2.80	2.16	1.31	0.85	0.54
14.50	52.20	R							124.83	52.84	21.20	7.96	4.23	1.24	0.43	0.15
		v							8.80	6.24	4.32	2.90	2.24	1.35	0.88	0.56
15.00	54.00	R							133.14	56.33	22.59	8.48	4.50	1.32	0.46	0.16
		v							9.10	6.45	4.47	3.00	2.32	1.40	0.91	0.58
16.00	57.60	R							150.56	63.62	25.48	9.55	5.07	1.49	0.52	0.18
		v							9.71	6.88	4.76	3.20	2.47	1.49	0.97	0.62
17.00	61.20	R							169.03	71.35	28.54	10.69	5.67	1.66	0.58	0.20
		v							10.32	7.31	5.06	3.40	2.63	1.59	1.03	0.66
18.00	64.80	R								79.51	31.77	11.88	6.30	1.84	0.64	0.22
		v								7.74	5.36	3.60	2.78	1.68	1.09	0.69
19.00	68.40	R								88.09	35.16	13.14	6.96	2.03	0.71	0.24
		v								8.17	5.66	3.80	2.93	1.77	1.15	0.73
20.00	72.00	R								97.11	38.73	14.45	7.65	2.23	0.78	0.26
		v								8.60	5.95	4.00	3.09	1.87	1.21	0.77
21.00	75.60	R								106.56	42.46	15.83	8.38	2.44	0.85	0.29
		v								9.04	6.25	4.20	3.24	1.96	1.27	0.81
22.00	79.20	R								116.44	46.35	17.26	9.13	2.66	0.92	0.31
		v								9.47	6.55	4.40	3.40	2.05	1.33	0.85
23.00	82.80	R								126.75	50.41	18.76	9.92	2.89	1.00	0.34
		v								9.90	6.85	4.60	3.55	2.15	1.39	0.89
24.00	86.40	R								137.49	54.64	20.31	10.73	3.12	1.08	0.37
		v								10.33	7.14	4.80	3.71	2.24	1.45	0.93
25.00	90.00	R									59.03	21.93	11.58	3.36	1.17	0.39
		v									7.44	5.00	3.86	2.33	1.51	0.97
26.00	93.60	R									63.59	23.60	12.46	3.62	1.25	0.42
		v									7.74	5.20	4.02	2.43	1.57	1.00

PLANNING AND DESIGN

		Dimension	16 mm	20 mm	25 mm	32 mm	40 mm	50 mm	63 mm	75 mm	90 mm	110 mm	125 mm	160 mm	200 mm	250 mm
		Wall thickness	2.2 mm	2.8 mm	3.5 mm	4.4 mm	5.5 mm	6.9 mm	8.6 mm	10.3 mm	12.3 mm	15.1 mm	17.1 mm	21.6 mm	27.4 mm	34.2 mm
l/s	m³/h															
27.00	97.20	R									68.31	25.34	13.37	3.88	1.34	0.45
		v									8.04	5.40	4.17	2.52	1.63	1.04
28.00	100.80	R									73.20	27.13	14.31	4.15	1.43	0.48
		v									8.34	5.60	4.32	2.61	1.69	1.08
29.00	104.40	R									78.26	28.98	15.28	4.42	1.53	0.52
		v									8.63	5.80	4.48	2.71	1.75	1.12
30.00	108.00	R									83.48	30.90	16.28	4.71	1.63	0.55
		v									8.93	6.00	4.63	2.80	1.81	1.16
32.00	115.20	R									94.42	34.90	18.37	5.31	1.83	0.62
		v									9.53	6.40	4.94	2.99	1.93	1.24
34.00	122.40	R									106.01	39.14	20.59	5.94	2.05	0.69
		v									10.12	6.80	5.25	3.17	2.05	1.31
36.00	129.60	R										43.61	22.93	6.60	2.27	0.76
		v										7.20	5.56	3.36	2.17	1.39
38.00	136.80	R										48.32	25.38	7.30	2.51	0.84
		v										7.60	5.87	3.55	2.29	1.47
40.00	144.00	R										53.27	27.96	8.03	2.76	0.93
		v										8.00	6.18	3.73	2.42	1.54
42.00	151.20	R										58.45	30.67	8.80	3.02	1.01
		v										8.40	6.49	3.92	2.54	1.62
44.00	158.40	R										63.87	33.49	9.60	3.29	1.10
		v										8.80	6.80	4.11	2.66	1.70
46.00	165.60	R										69.53	36.43	10.43	3.57	1.20
		v										9.20	7.10	4.29	2.78	1.78
48.00	172.80	R										75.42	39.50	11.30	3.86	1.29
		v										9.60	7.41	4.48	2.90	1.85
50.00	180.00	R										81.54	42.68	12.19	4.17	1.39
		v										10.00	7.72	4.67	3.02	1.93
52.00	187.20	R											45.99	13.13	4.48	1.50
		v											8.03	4.85	3.14	2.01
54.00	194.40	R											49.41	14.09	4.81	1.61
		v											8.34	5.04	3.26	2.08
56.00	201.60	R											52.96	15.09	5.15	1.72
		v											8.65	5.23	3.38	2.16
58.00	208.80	R											56.63	16.12	5.49	1.83
		v											8.96	5.41	3.50	2.24
60.00	216.00	R											60.41	17.18	5.85	1.95
		v											9.27	5.60	3.62	2.32
62.00	223.20	R											64.32	18.28	6.22	2.07
		v											9.57	5.79	3.74	2.39
64.00	230.40	R											68.35	19.41	6.60	2.20
		v											9.88	5.97	3.87	2.47
66.00	237.60	R											72.50	20.57	6.99	2.33
		v											10.19	6.16	3.99	2.55
68.00	244.80	R												21.77	7.39	2.46
		v												6.35	4.11	2.63
70.00	252.00	R												22.99	7.81	2.60
		v												6.53	4.23	2.70
72.00	259.20	R												24.26	8.23	2.73
		v												6.72	4.35	2.78
74.00	266.40	R												25.55	8.66	2.88
		v												6.91	4.47	2.86
78.00	280.80	R												28.24	9.56	3.17
		v												7.28	4.71	3.01
80.00	288.00	R												29.63	10.03	3.33
		v												7.47	4.83	3.09
82.00	295.20	R												31.05	10.51	3.48
		v												7.65	4.95	3.17
84.00	302.40	R												32.51	11.00	3.64
		v												7.84	5.07	3.24
86.00	309.60	R												34.00	11.49	3.81
		v												8.03	5.19	3.32
88.00	316.80	R												35.52	12.00	3.97
		v												8.21	5.31	3.40
90.00	324.00	R												37.08	12.52	4.14
		v												8.40	5.44	3.47

PLANNING AND DESIGN

Pressure loss due to pipe resistance R and flow rate v depending on flow V

Pipes SDR 9

Temperature 20 °C Roughness: 0.007 mm Density: 998.29 kg/m³ Kin. viscosity: 1.004E-06 m²/s

		Dimension	32 mm	40 mm	50 mm	63 mm	75 mm	90 mm	110 mm	125 mm
		Wall thickness	3.6 mm	4.5 mm	5.6 mm	7.1 mm	8.4 mm	10.1 mm	12.3 mm	14.0 mm
l/s	m³/h									
0,01	0,04	R in mbar/m	0,01							
		v in m/s	0,02							
0,02	0,07	R	0,03	0,01						
		v	0,04	0,03						
0,03	0,11	R	0,05	0,02						
		v	0,06	0,04						
0,04	0,14	R	0,07	0,03	0,01					
		v	0,08	0,05	0,03					
0,05	0,18	R	0,11	0,04	0,01					
		v	0,10	0,07	0,04					
0,06	0,22	R	0,14	0,05	0,02	0,01				
		v	0,12	0,08	0,05	0,03				
0,07	0,25	R	0,19	0,07	0,02	0,01				
		v	0,14	0,09	0,06	0,04				
0,08	0,29	R	0,23	0,08	0,03	0,01				
		v	0,17	0,11	0,07	0,04				
0,09	0,32	R	0,28	0,10	0,04	0,01				
		v	0,19	0,12	0,08	0,05				
0,10	0,36	R	0,34	0,12	0,04	0,01	0,01			
		v	0,21	0,13	0,08	0,05	0,04			
0,12	0,43	R	0,45	0,16	0,06	0,02	0,01			
		v	0,25	0,16	0,10	0,06	0,05			
0,14	0,50	R	0,59	0,21	0,07	0,02	0,01			
		v	0,29	0,19	0,12	0,07	0,05			
0,16	0,58	R	0,74	0,26	0,09	0,03	0,01			
		v	0,33	0,21	0,14	0,09	0,06			
0,18	0,65	R	0,90	0,32	0,11	0,04	0,02	0,01		
		v	0,37	0,24	0,15	0,10	0,07	0,05		
0,20	0,72	R	1,08	0,38	0,13	0,05	0,02	0,01		
		v	0,41	0,26	0,17	0,11	0,08	0,05		
0,30	1,08	R	2,17	0,75	0,26	0,09	0,04	0,02	0,01	
		v	0,62	0,40	0,25	0,16	0,11	0,08	0,05	
0,40	1,44	R	3,58	1,24	0,43	0,14	0,06	0,03	0,01	0,01
		v	0,83	0,53	0,34	0,21	0,15	0,10	0,07	0,05
0,50	1,80	R	5,29	1,82	0,63	0,21	0,09	0,04	0,02	0,01
		v	1,04	0,66	0,42	0,27	0,19	0,13	0,09	0,07
0,60	2,16	R	7,30	2,51	0,86	0,29	0,13	0,05	0,02	0,01
		v	1,24	0,79	0,51	0,32	0,23	0,16	0,10	0,08
0,70	2,52	R	9,60	3,29	1,12	0,38	0,16	0,07	0,03	0,01
		v	1,45	0,93	0,59	0,37	0,26	0,18	0,12	0,09
0,80	2,88	R	12,18	4,16	1,42	0,48	0,21	0,09	0,03	0,02
		v	1,66	1,06	0,68	0,43	0,30	0,21	0,14	0,11
0,90	3,24	R	15,04	5,12	1,75	0,58	0,25	0,11	0,04	0,02
		v	1,86	1,19	0,76	0,48	0,34	0,24	0,16	0,12
1,00	3,60	R	18,18	6,18	2,10	0,70	0,30	0,13	0,05	0,03
		v	2,07	1,32	0,85	0,53	0,38	0,26	0,17	0,14
1,10	3,96	R	21,59	7,32	2,49	0,83	0,36	0,15	0,06	0,03
		v	2,28	1,46	0,93	0,59	0,41	0,29	0,19	0,15
1,20	4,32	R	25,27	8,56	2,90	0,97	0,42	0,18	0,07	0,04
		v	2,48	1,59	1,01	0,64	0,45	0,31	0,21	0,16
1,30	4,68	R	29,22	9,88	3,34	1,11	0,48	0,20	0,08	0,04
		v	2,69	1,72	1,10	0,70	0,49	0,34	0,23	0,18
1,40	5,04	R	33,44	11,28	3,82	1,27	0,55	0,23	0,09	0,05
		v	2,90	1,85	1,18	0,75	0,53	0,37	0,24	0,19
1,60	5,76	R	42,68	14,36	4,84	1,61	0,69	0,29	0,11	0,06
		v	3,31	2,12	1,35	0,86	0,60	0,42	0,28	0,22
1,80	6,48	R	52,97	17,77	5,98	1,98	0,85	0,36	0,14	0,07
		v	3,73	2,38	1,52	0,96	0,68	0,47	0,31	0,24
2,00	7,20	R	64,32	21,53	7,23	2,39	1,03	0,43	0,16	0,09
		v	4,14	2,65	1,69	1,07	0,75	0,52	0,35	0,27
2,20	7,92	R	76,72	25,62	8,58	2,83	1,21	0,51	0,19	0,11
		v	4,55	2,91	1,86	1,18	0,83	0,57	0,38	0,30
2,40	8,64	R	90,15	30,04	10,05	3,31	1,42	0,59	0,23	0,12
		v	4,97	3,18	2,03	1,28	0,90	0,63	0,42	0,32
2,60	9,36	R	104,63	34,79	11,61	3,82	1,63	0,68	0,26	0,14
		v	5,38	3,44	2,20	1,39	0,98	0,68	0,45	0,35

Table 11

PLANNING AND DESIGN

		Dimension	32 mm	40 mm	50 mm	63 mm	75 mm	90 mm	110 mm	125 mm
		Wall thickness	3.6 mm	4.56 mm	5.6 mm	7.1 mm	8.4 mm	10.1 mm	12.3 mm	14.0 mm
l/s	m³/h									
2,80	10,08	R	120,14	39,88	13,29	4,36	1,86	0,78	0,30	0,16
		v	5,80	3,71	2,37	1,50	1,05	0,73	0,49	0,38
3,00	10,80	R	136,68	45,29	15,07	4,94	2,11	0,88	0,33	0,18
		v	6,21	3,97	2,54	1,60	1,13	0,78	0,52	0,41
3,50	12,60	R	182,55	60,25	19,97	6,53	2,78	1,16	0,44	0,24
		v	7,25	4,64	2,96	1,87	1,32	0,91	0,61	0,47
4,00	14,40	R	234,85	77,25	25,53	8,32	3,54	1,47	0,56	0,30
		v	8,28	5,30	3,38	2,14	1,50	1,05	0,70	0,54
4,50	16,20	R	293,56	96,28	31,72	10,31	4,38	1,82	0,69	0,37
		v	9,32	5,96	3,81	2,41	1,69	1,18	0,79	0,61
5,00	18,00	R	358,67	117,32	38,55	12,50	5,30	2,19	0,83	0,45
		v	10,35	6,62	4,23	2,67	1,88	1,31	0,87	0,68
5,50	19,80	R	430,16	140,38	46,02	14,89	6,30	2,61	0,98	0,53
		v	11,39	7,29	4,65	2,94	2,07	1,44	0,96	0,74
6,00	21,60	R	508,04	165,44	54,12	17,47	7,38	3,05	1,15	0,62
		v	12,42	7,95	5,07	3,21	2,26	1,57	1,05	0,81
6,50	23,40	R		192,52	62,85	20,25	8,54	3,53	1,33	0,72
		v		8,61	5,50	3,48	2,44	1,70	1,13	0,88
7,00	25,20	R		221,59	72,22	23,23	9,79	4,03	1,52	0,82
		v		9,27	5,92	3,74	2,63	1,83	1,22	0,95
7,50	27,00	R		252,67	82,20	26,39	11,11	4,57	1,72	0,93
		v		9,94	6,34	4,01	2,82	1,96	1,31	1,01
8,00	28,80	R		285,75	92,82	29,76	12,51	5,15	1,93	1,04
		v		10,60	6,77	4,28	3,01	2,09	1,40	1,08
8,50	30,60	R		320,82	104,06	33,31	13,99	5,75	2,16	1,16
		v		11,26	7,19	4,54	3,20	2,22	1,48	1,15
9,00	32,40	R			115,93	37,05	15,54	6,38	2,39	1,29
		v			7,61	4,81	3,38	2,35	1,57	1,22
9,50	34,20	R			128,42	40,99	17,18	7,05	2,64	1,42
		v			8,03	5,08	3,57	2,48	1,66	1,29
10,00	36,00	R			141,53	45,12	18,89	7,74	2,90	1,56
		v			8,46	5,35	3,76	2,61	1,75	1,35
10,50	37,80	R			155,27	49,44	20,68	8,47	3,16	1,70
		v			8,88	5,61	3,95	2,74	1,83	1,42
11,00	39,60	R			169,63	53,95	22,55	9,22	3,44	1,85
		v			9,30	5,88	4,13	2,87	1,92	1,49
11,50	41,40	R			184,61	58,65	24,49	10,01	3,74	2,01
		v			9,73	6,15	4,32	3,01	2,01	1,56
12,00	43,20	R			200,22	63,55	26,51	10,83	4,04	2,17
		v			10,15	6,42	4,51	3,14	2,09	1,62
12,50	45,00	R			216,45	68,63	28,61	11,68	4,35	2,34
		v			10,57	6,68	4,70	3,27	2,18	1,69
13,00	46,80	R			233,29	73,90	30,79	12,56	4,67	2,51
		v			10,99	6,95	4,89	3,40	2,27	1,76
13,50	48,60	R				79,36	33,04	13,47	5,01	2,69
		v				7,22	5,07	3,53	2,36	1,83
14,00	50,40	R				85,01	35,37	14,41	5,36	2,88
		v				7,49	5,26	3,66	2,44	1,89
14,50	52,20	R				90,85	37,77	15,38	5,71	3,07
		v				7,75	5,45	3,79	2,53	1,96
15,00	54,00	R				96,88	40,26	16,38	6,08	3,26
		v				8,02	5,64	3,92	2,62	2,03
16,00	57,60	R				109,51	45,45	18,47	6,85	3,67
		v				8,55	6,01	4,18	2,79	2,17
17,00	61,20	R				122,90	50,95	20,68	7,66	4,11
		v				9,09	6,39	4,44	2,97	2,30
18,00	64,80	R				137,04	56,75	23,01	8,51	4,56
		v				9,62	6,77	4,70	3,14	2,44
19,00	68,40	R				151,94	62,86	25,46	9,41	5,04
		v				10,16	7,14	4,97	3,32	2,57
20,00	72,00	R				167,59	69,27	28,03	10,35	5,54
		v				10,69	7,52	5,23	3,49	2,71
21,00	75,60	R					75,98	30,71	11,33	6,06
		v					7,89	5,49	3,67	2,84
22,00	79,20	R					83,00	33,52	12,35	6,60
		v					8,27	5,75	3,84	2,98
23,00	82,80	R					90,32	36,45	13,42	7,17
		v					8,65	6,01	4,02	3,11
24,00	86,40	R					97,95	39,49	14,53	7,76
		v					9,02	6,27	4,19	3,25
25,00	90,00	R					105,87	42,66	15,68	8,37
		v					9,40	6,53	4,36	3,38

PLANNING AND DESIGN

		Dimension	32 mm	40 mm	50 mm	63 mm	75 mm	90 mm	110 mm	125 mm
		Wall thickness	3.6 mm	4.56 mm	5.6 mm	7.1 mm	8.4 mm	10.1 mm	12.3 mm	14.0 mm
l/s	m³/h									
26,00	93,60	R					114,10	45,94	16,87	9,00
		v					9,77	6,79	4,54	3,52
27,00	97,20	R					122,63	49,34	18,10	9,65
		v					10,15	7,06	4,71	3,65
28,00	100,80	R					131,47	52,86	19,38	10,33
		v					10,53	7,32	4,89	3,79
29,00	104,40	R						56,49	20,70	11,03
		v						7,58	5,06	3,92
30,00	108,000	R						60,25	22,06	11,75
		v						7,84	5,24	4,06
32,00	115,20	R						68,11	24,91	13,25
		v						8,36	5,59	4,33
34,00	122,40	R						76,45	27,92	14,84
		v						8,89	5,94	4,60
36,00	129,60	R						85,26	31,10	16,52
		v						9,41	6,28	4,87
38,00	136,80	R						94,54	34,45	18,29
		v						9,93	6,63	5,14
40,00	144,00	R						104,29	37,96	20,14
		v						10,45	6,98	5,41
42,00	151,20	R						114,50	41,64	22,08
		v						10,98	7,33	5,68
44,00	158,40	R							45,48	24,10
		v							7,68	5,95
46,00	165,60	R							49,49	26,21
		v							8,03	6,22
48,00	172,80	R							53,67	28,41
		v							8,38	6,50
50,00	180,00	R							58,01	30,69
		v							8,73	6,77
52,00	187,20	R							62,52	33,06
		v							9,08	7,04
54,00	194,40	R							67,20	35,51
		v							9,43	7,31
56,00	201,60	R							72,03	38,05
		v							9,78	7,58
58,00	208,80	R							77,04	40,68
		v							10,13	7,85
60,00	216,00	R							82,21	43,39
		v							10,47	8,12
62,00	223,20	R								46,19
		v								8,39
64,00	230,40	R								49,07
		v								8,66
66,00	237,60	R								52,04
		v								8,93
68,00	244,80	R								55,09
		v								9,20
70,00	252,00	R								58,23
		v								9,47
72,00	259,20	R								61,45
		v								9,74
74,00	266,40	R								64,76
		v								10,01
78,00	280,80	R								71,64
		v								10,56
80,00	288,00	R								
		v								
82,00	295,20	R								
		v								
84,00	302,40	R								
		v								
86,00	309,60	R								
		v								
88,00	316,80	R								
		v								
90,00	324,00	R								
		v								

Pressure loss due to pipe resistance R and flow rate v depending on flow V

Pipes SDR 11

Temperatur 20 °CRoughness: 0.007 mm Density: 998.29 kg/m³ Kin. viscosity: 1.004E-06 m²/s

		Dimension	20 mm	25 mm	32 mm	40 mm	50 mm	63 mm	75 mm	90 mm	110 mm	125 mm	160 mm	200 mm	250 mm
		Wall thickness	1.9 mm	2.3 mm	2.9 mm	3.7 mm	4.6 mm	5.8 mm	6.8 mm	8.2 mm	10.0 mm	11.4 mm	14.6 mm	18.2 mm	22.7 mm
l/s	m³/h														
0.01	0.04	R in mbar/m	0.06	0.02	0.01										
		v in m/s	0.05	0.03	0.02										
0.02	0.07	R	0.18	0.06	0.02	0.01									
		v	0.10	0.06	0.04	0.02									
0.03	0.11	R	0.34	0.12	0.04	0.01									
		v	0.15	0.09	0.06	0.04									
0.04	0.14	R	0.54	0.18	0.06	0.02	0.01								
		v	0.19	0.12	0.07	0.05	0.03								
0.05	0.18	R	0.78	0.27	0.08	0.03	0.01								
		v	0.24	0.15	0.09	0.06	0.04								
0.06	0.22	R	1.05	0.36	0.11	0.04	0.01	0.01							
		v	0.29	0.18	0.11	0.07	0.05	0.03							
0.07	0.25	R	1.36	0.46	0.14	0.05	0.02	0.01							
		v	0.34	0.21	0.13	0.08	0.05	0.03							
0.08	0.29	R	1.70	0.58	0.18	0.06	0.02	0.01							
		v	0.39	0.24	0.15	0.10	0.06	0.04							
0.09	0.32	R	2.07	0.70	0.22	0.08	0.03	0.01							
		v	0.44	0.28	0.17	0.11	0.07	0.04							
0.10	0.36	R	2.48	0.84	0.26	0.09	0.03	0.01	0.01						
		v	0.49	0.31	0.19	0.12	0.08	0.05	0.03						
0.12	0.43	R	3.38	1.14	0.35	0.13	0.04	0.02	0.01						
		v	0.58	0.37	0.22	0.14	0.09	0.06	0.04						
0.14	0.50	R	4.40	1.48	0.46	0.16	0.06	0.02	0.01						
		v	0.68	0.43	0.26	0.17	0.11	0.07	0.05						
0.16	0.58	R	5.54	1.86	0.57	0.20	0.07	0.02	0.01						
		v	0.78	0.49	0.30	0.19	0.12	0.08	0.05						
0.18	0.65	R	6.79	2.27	0.70	0.25	0.09	0.03	0.01	0.01					
		v	0.87	0.55	0.33	0.22	0.14	0.09	0.06	0.04					
0.20	0.72	R	8.16	2.72	0.83	0.30	0.10	0.04	0.02	0.01					
		v	0.97	0.61	0.37	0.24	0.15	0.10	0.07	0.05					
0.30	1.08	R	16.61	5.50	1.67	0.59	0.21	0.07	0.03	0.01	0.01				
		v	1.46	0.92	0.56	0.36	0.23	0.14	0.10	0.07	0.05				
0.40	1.44	R	27.68	9.11	2.75	0.97	0.34	0.11	0.05	0.02	0.01				
		v	1.94	1.22	0.74	0.48	0.31	0.19	0.14	0.09	0.06				
0.50	1.80	R	41.30	13.53	4.07	1.43	0.49	0.17	0.07	0.03	0.01	0.01			
		v	2.43	1.53	0.93	0.60	0.38	0.24	0.17	0.12	0.08	0.06			
0.60	2.16	R	57.42	18.73	5.61	1.97	0.68	0.23	0.10	0.04	0.02	0.01			
		v	2.91	1.84	1.11	0.72	0.46	0.29	0.20	0.14	0.09	0.07			
0.70	2.52	R	75.99	24.69	7.37	2.58	0.89	0.30	0.13	0.05	0.02	0.01			
		v	3.40	2.14	1.30	0.84	0.54	0.34	0.24	0.16	0.11	0.09			
0.80	2.88	R	97.01	31.41	9.34	3.27	1.12	0.37	0.16	0.07	0.03	0.01			
		v	3.88	2.45	1.48	0.96	0.61	0.39	0.27	0.19	0.13	0.10			
0.90	3.24	R	120.44	38.87	11.53	4.02	1.37	0.46	0.20	0.08	0.03	0.02	0.01		
		v	4.37	2.75	1.67	1.08	0.69	0.43	0.30	0.21	0.14	0.11	0.07		
1.00	3.60	R	146.28	47.08	13.93	4.85	1.65	0.55	0.24	0.10	0.04	0.02	0.01		
		v	4.85	3.06	1.85	1.20	0.76	0.48	0.34	0.24	0.16	0.12	0.07		
1.10	3.96	R	174.52	56.03	16.53	5.74	1.96	0.65	0.28	0.12	0.05	0.02	0.01		
		v	5.34	3.37	2.04	1.32	0.84	0.53	0.37	0.26	0.17	0.13	0.08		
1.20	4.32	R	205.14	65.70	19.34	6.71	2.28	0.76	0.32	0.14	0.05	0.03	0.01		
		v	5.82	3.67	2.23	1.44	0.92	0.58	0.41	0.28	0.19	0.15	0.09		
1.30	4.68	R	238.15	76.11	22.36	7.74	2.63	0.87	0.37	0.16	0.06	0.03	0.01		
		v	6.31	3.98	2.41	1.56	0.99	0.63	0.44	0.31	0.20	0.16	0.10		
1.40	5.04	R	273.54	87.24	25.57	8.84	3.00	0.99	0.42	0.18	0.07	0.04	0.01		
		v	6.79	4.28	2.60	1.68	1.07	0.67	0.47	0.33	0.22	0.17	0.10		
1.60	5.76	R	351.43	111.67	32.61	11.25	3.80	1.25	0.54	0.23	0.09	0.05	0.01		
		v	7.76	4.90	2.97	1.92	1.22	0.77	0.54	0.38	0.25	0.20	0.12		
1.80	6.48	R	438.78	138.97	40.45	13.91	4.69	1.54	0.66	0.28	0.11	0.06	0.02	0.01	
		v	8.73	5.51	3.34	2.16	1.38	0.87	0.61	0.42	0.28	0.22	0.13	0.09	
2.00	7.20	R	535.58	169.14	49.09	16.84	5.67	1.86	0.79	0.33	0.13	0.07	0.02	0.01	
		v	9.70	6.12	3.71	2.40	1.53	0.96	0.68	0.47	0.31	0.24	0.15	0.10	
2.20	7.92	R	641.81	202.17	58.51	20.03	6.73	2.21	0.94	0.39	0.15	0.08	0.03	0.01	
		v	10.67	6.73	4.08	2.64	1.68	1.06	0.74	0.52	0.35	0.27	0.16	0.10	
2.40	8.64	R		238.06	68.72	23.48	7.87	2.58	1.10	0.46	0.18	0.10	0.03	0.01	
		v		7.34	4.45	2.88	1.84	1.16	0.81	0.56	0.38	0.29	0.18	0.11	
2.60	9.36	R		276.78	79.71	27.18	9.10	2.97	1.26	0.53	0.20	0.11	0.03	0.01	
		v		7.95	4.82	3.11	1.99	1.25	0.88	0.61	0.41	0.32	0.19	0.12	

Table 12

PLANNING AND DESIGN

		Dimension	20 mm	25 mm	32 mm	40 mm	50 mm	63 mm	75 mm	90 mm	110 mm	125 mm	160 mm	200 mm	250 mm
		Wall thickness	1.9 mm	2.3 mm	2.9 mm	3.7 mm	4.6 mm	5.8 mm	6.8 mm	8.2 mm	10.0 mm	11.4 mm	14.6 mm	18.2 mm	22.7 mm
l/s	m³/h														
2.80	10.08	R		318.35	91.49	31.14	10.40	3.40	1.44	0.60	0.23	0.13	0.04	0.01	
		v		8.57	5.19	3.35	2.14	1.35	0.95	0.66	0.44	0.34	0.21	0.13	
3.00	10.80	R		362.76	104.04	35.35	11.79	3.84	1.63	0.68	0.26	0.14	0.04	0.02	0.01
		v		9.18	5.56	3.59	2.29	1.45	1.01	0.71	0.47	0.37	0.22	0.14	0.09
3.50	12.60	R		486.16	138.82	47.00	15.62	5.07	2.15	0.90	0.34	0.19	0.06	0.02	0.01
		v		10.71	6.49	4.19	2.68	1.69	1.18	0.82	0.55	0.43	0.26	0.17	0.11
4.00	14.40	R			178.44	60.21	19.95	6.46	2.73	1.14	0.43	0.24	0.07	0.03	0.01
		v			7.42	4.79	3.06	1.93	1.35	0.94	0.63	0.49	0.30	0.19	0.12
4.50	16.20	R			222.89	74.99	24.77	8.01	3.38	1.41	0.53	0.29	0.09	0.03	0.01
		v			8.35	5.39	3.44	2.17	1.52	1.06	0.71	0.55	0.33	0.21	0.14
5.00	18.00	R			272.15	91.32	30.09	9.70	4.08	1.70	0.64	0.35	0.11	0.04	0.01
		v			9.27	5.99	3.82	2.41	1.69	1.18	0.79	0.61	0.37	0.24	0.15
5.50	19.80	R			326.21	109.21	35.90	11.55	4.85	2.02	0.76	0.41	0.13	0.04	0.02
		v			10.20	6.59	4.21	2.65	1.86	1.29	0.86	0.67	0.41	0.26	0.17
6.00	21.60	R				128.65	42.20	13.55	5.69	2.36	0.89	0.48	0.15	0.05	0.02
		v				7.19	4.59	2.89	2.03	1.41	0.94	0.73	0.45	0.29	0.18
6.50	23.40	R				149.64	48.99	15.70	6.58	2.73	1.03	0.56	0.17	0.06	0.02
		v				7.79	4.97	3.13	2.20	1.53	1.02	0.79	0.48	0.31	0.20
7.00	25.20	R				172.17	56.26	17.99	7.53	3.12	1.18	0.64	0.20	0.07	0.02
		v				8.39	5.35	3.37	2.36	1.65	1.10	0.85	0.52	0.33	0.21
7.50	27.00	R				196.24	64.02	20.44	8.55	3.53	1.33	0.72	0.22	0.08	0.03
		v				8.99	5.74	3.61	2.53	1.76	1.18	0.91	0.56	0.36	0.23
8.00	28.80	R				221.85	72.27	23.03	9.62	3.97	1.50	0.81	0.25	0.08	0.03
		v				9.58	6.12	3.86	2.70	1.88	1.26	0.98	0.60	0.38	0.24
8.50	30.60	R				249.01	80.99	25.78	10.76	4.44	1.67	0.90	0.28	0.09	0.03
		v				10.18	6.50	4.10	2.87	2.00	1.34	1.04	0.63	0.40	0.26
9.00	32.40	R					90.20	28.67	11.95	4.93	1.85	1.00	0.31	0.10	0.04
		v					6.88	4.34	3.04	2.12	1.41	1.10	0.67	0.43	0.27
9.50	34.20	R					99.89	31.70	13.20	5.44	2.04	1.10	0.34	0.11	0.04
		v					7.27	4.58	3.21	2.23	1.49	1.16	0.71	0.45	0.29
10.00	36.00	R					110.06	34.89	14.52	5.97	2.24	1.21	0.37	0.13	0.04
		v					7.65	4.82	3.38	2.35	1.57	1.22	0.74	0.48	0.30
10.50	37.80	R					120.71	38.22	15.89	6.53	2.45	1.32	0.40	0.14	0.05
		v					8.03	5.06	3.55	2.47	1.65	1.28	0.78	0.50	0.32
11.00	39.60	R					131.84	41.69	17.32	7.12	2.67	1.44	0.44	0.15	0.05
		v					8.41	5.30	3.72	2.59	1.73	1.34	0.82	0.52	0.33
11.50	41.40	R					143.45	45.32	18.81	7.72	2.89	1.56	0.47	0.16	0.06
		v					8.80	5.54	3.88	2.70	1.81	1.40	0.86	0.55	0.35
12.00	43.20	R					155.54	49.08	20.36	8.35	3.13	1.69	0.51	0.17	0.06
		v					9.18	5.78	4.05	2.82	1.89	1.46	0.89	0.57	0.36
12.50	45.00	R					168.11	53.00	21.96	9.00	3.37	1.82	0.55	0.19	0.06
		v					9.56	6.02	4.22	2.94	1.96	1.52	0.93	0.59	0.38
13.00	46.80	R					181.16	57.06	23.63	9.68	3.62	1.95	0.59	0.20	0.07
		v					9.94	6.27	4.39	3.06	2.04	1.58	0.97	0.62	0.40
13.50	48.60	R					194.69	61.26	25.35	10.38	3.88	2.09	0.63	0.22	0.07
		v					10.33	6.51	4.56	3.17	2.12	1.65	1.00	0.64	0.41
14.00	50.40	R						65.61	27.13	11.10	4.14	2.23	0.68	0.23	0.08
		v						6.75	4.73	3.29	2.20	1.71	1.04	0.67	0.43
14.50	52.20	R						70.10	28.97	11.84	4.42	2.38	0.72	0.24	0.08
		v						6.99	4.90	3.41	2.28	1.77	1.08	0.69	0.44
15.00	54.00	R						74.74	30.87	12.61	4.70	2.53	0.76	0.26	0.09
		v						7.23	5.07	3.53	2.36	1.83	1.12	0.71	0.46
16.00	57.60	R						84.46	34.84	14.22	5.30	2.85	0.86	0.29	0.10
		v						7.71	5.40	3.76	2.52	1.95	1.19	0.76	0.49
17.00	61.20	R						94.75	39.04	15.91	5.92	3.18	0.96	0.33	0.11
		v						8.19	5.74	4.00	2.67	2.07	1.27	0.81	0.52
18.00	64.80	R						105.62	43.47	17.70	6.58	3.53	1.06	0.36	0.12
		v						8.67	6.08	4.23	2.83	2.19	1.34	0.86	0.55
19.00	68.40	R						117.06	48.13	19.58	7.27	3.90	1.17	0.40	0.14
		v						9.16	6.42	4.47	2.99	2.32	1.41	0.90	0.58
20.00	72.00	R						129.09	53.03	21.55	7.99	4.29	1.29	0.44	0.15
		v						9.64	6.75	4.70	3.14	2.44	1.49	0.95	0.61
21.00	75.60	R						141.69	58.15	23.61	8.75	4.69	1.41	0.48	0.16
		v						10.12	7.09	4.94	3.30	2.56	1.56	1.00	0.64
22.00	79.20	R							63.51	25.77	9.54	5.11	1.53	0.52	0.18
		v							7.43	5.17	3.46	2.68	1.64	1.05	0.67
23.00	82.80	R							69.09	28.01	10.36	5.55	1.66	0.56	0.19
		v							7.77	5.41	3.62	2.80	1.71	1.09	0.70
24.00	86.40	R							74.90	30.34	11.21	6.00	1.80	0.61	0.21
		v							8.11	5.64	3.77	2.93	1.79	1.14	0.73
25.00	90.00	R							80.95	32.76	12.10	6.47	1.94	0.65	0.22
		v							8.44	5.88	3.93	3.05	1.86	1.19	0.76
26.00	93.60	R							87.22	35.28	13.02	6.96	2.08	0.70	0.24
		v							8.78	6.11	4.09	3.17	1.93	1.24	0.79

PLANNING AND DESIGN

		Dimension	20 mm	25 mm	32 mm	40 mm	50 mm	63 mm	75 mm	90 mm	110 mm	125 mm	160 mm	200 mm	250 mm
		Wall thickness	1.9 mm	2.3 mm	2.9 mm	3.7 mm	4.6 mm	5.8 mm	6.8 mm	8.2 mm	10.0 mm	11.4 mm	14.6 mm	18.2 mm	22.7 mm
l/s	m³/h														
27.00	97.20	R							93.72	37.88	13.97	7.46	2.23	0.75	0.25
		v							9.12	6.35	4.24	3.29	2.01	1.28	0.82
28.00	100.80	R							100.46	40.57	14.95	7.99	2.38	0.80	0.27
		v							9.46	6.58	4.40	3.41	2.08	1.33	0.85
29.00	104.40	R							107.42	43.36	15.96	8.52	2.54	0.86	0.29
		v							9.79	6.82	4.56	3.54	2.16	1.38	0.88
30.00	108.00	R							114.61	46.23	17.01	9.08	2.71	0.91	0.31
		v							10.13	7.05	4.72	3.66	2.23	1.43	0.91
32.00	115.20	R								52.25	19.20	10.24	3.05	1.02	0.35
		v								7.52	5.03	3.90	2.38	1.52	0.97
34.00	122.40	R								58.62	21.51	11.46	3.41	1.14	0.39
		v								7.99	5.34	4.14	2.53	1.62	1.03
36.00	129.60	R								65.36	23.96	12.76	3.79	1.27	0.43
		v								8.46	5.66	4.39	2.68	1.71	1.09
38.00	136.80	R								72.45	26.53	14.12	4.19	1.40	0.47
		v								8.93	5.97	4.63	2.83	1.81	1.16
40.00	144.00	R								79.90	29.22	15.54	4.60	1.54	0.52
		v								9.40	6.29	4.88	2.98	1.90	1.22
42.00	151.20	R								87.71	32.05	17.03	5.04	1.68	0.57
		v								9.87	6.60	5.12	3.13	2.00	1.28
44.00	158.40	R								95.87	35.00	18.59	5.49	1.84	0.62
		v								10.34	6.92	5.36	3.27	2.09	1.34
46.00	165.60	R									38.08	20.21	5.97	1.99	0.67
		v									7.23	5.61	3.42	2.19	1.40
48.00	172.80	R									41.28	21.90	6.46	2.15	0.72
		v									7.55	5.85	3.57	2.28	1.46
50.00	180.00	R									44.61	23.66	6.97	2.32	0.78
		v									7.86	6.10	3.72	2.38	1.52
52.00	187.20	R									48.07	25.48	7.50	2.50	0.84
		v									8.17	6.34	3.87	2.47	1.58
54.00	194.40	R									51.65	27.37	8.05	2.68	0.90
		v									8.49	6.58	4.02	2.57	1.64
56.00	201.60	R									55.36	29.32	8.61	2.86	0.96
		v									8.80	6.83	4.17	2.66	1.70
58.00	208.80	R									59.20	31.34	9.20	3.06	1.02
		v									9.12	7.07	4.32	2.76	1.76
60.00	216.00	R									63.16	33.42	9.80	3.25	1.09
		v									9.43	7.31	4.47	2.85	1.82
62.00	223.20	R									67.24	35.57	10.42	3.46	1.16
		v									9.75	7.56	4.61	2.95	1.89
64.00	230.40	R									71.46	37.78	11.06	3.67	1.23
		v									10.06	7.80	4.76	3.04	1.95
66.00	237.60	R										40.06	11.72	3.88	1.30
		v										8.05	4.91	3.14	2.01
68.00	244.80	R										42.40	12.40	4.11	1.37
		v										8.29	5.06	3.23	2.07
70.00	252.00	R										44.81	13.10	4.33	1.45
		v										8.53	5.21	3.33	2.13
75.00	270.00	R										51.12	14.91	4.93	1.64
		v										9.14	5.58	3.57	2.28
80.00	288.00	R										57.84	16.85	5.56	1.85
		v										9.75	5.95	3.81	2.43
85.00	306.00	R										64.96	18.90	6.23	2.07
		v										10.36	6.33	4.04	2.59
90.00	324.00	R											21.06	6.93	2.30
		v											6.70	4.28	2.74
95.00	342.00	R											23.33	7.67	2.55
		v											7.07	4.52	2.89
100.00	360.00	R											25.72	8.45	2.80
		v											7.44	4.76	3.04
110.00	396.00	R											30.85	10.11	3.35
		v											8.19	5.23	3.35
120.00	432.00	R											36.42	11.92	3.94
		v											8.93	5.71	3.65
130.00	468.00	R											42.45	13.87	4.58
		v											9.67	6.18	3.95
140.00	504.00	R											48.94	15.96	5.26
		v											10.42	6.66	4.26
150.00	540.00	R											55.87	18.20	5.99
		v											11.16	7.14	4.56
160.00	576.00	R											63.26	20.58	6.76
		v											11.91	7.61	4.87
170.00	612.00	R											71.10	23.10	7.58
		v											12.65	8.09	5.17

5.2 Simplified procedure

General information
This section describes a simple method suitable to determine the inner pipe diameters for standard installations. The procedure can be applied to all building types, which do not have above-average dimensions. This means that the simplified procedure is suitable for the vast majority of all buildings.
The method is applied in the same way for both cold and hot water pipes.

Differentiating calculation procedure
The planner is free to determine the inner pipe diameters through the use of nationally recognised differentiating methods of calculation.

Hot water circulation pipes
Hot water circulation pipes are subject to other hydraulic laws and cannot be measured with this method. Flow velocities in hot water circulation pipes must be determined in accordance with national recommendations or manufacturer guidelines

Load unit
1 load unit (LU) is equal to a tapping point fitting flow rate Q_A of 0.1 l/s.

Tapping point fitting flow rates Q_A, minimum draw-off point fitting flow rates Q_{min} and load units for tapping points

Table 12

Tapping point	Q_A	Q_{min}	Load unit
	l/s	l/s	
wash basin, hand basin, bidet, cistern	0.1	0.1	1
household kitchen sink, household washing machine*, dishwasher, utility sink, shower head	0.2	0.15	2
urinal flusher	0.3	0.15	3
bath tub outlet	0.4	0.3	4
garden/garage tap	0.5	0.4	5
commercial kitchen sink DN 20, commercial bath tub outlet	0.8	0.8	8
flusher DN 20	1.5	1.0	15

* for commercial washing machines refer to the manufacturer's recommendations

The values listed above do not correspond to the values provided in product standards. They are merely used for the determination of inner pipe diameters.

Application of the simplified procedure
Starting from the farthest tapping point, the load units for the installation's individual pipe sections must be determined. The load units are then added. The probability of simultaneous use and of peak flow QD has been taken into account in the table of load values. Therefore, the inner pipe diameter can be obtained from the table.

The simplified calculation procedure is based on following flow rates.

Collecting lines, risers, floor level lines	maximum 2.0 m/s
Single supply lines	maximum 4.0 m/s

Note: National regulations may require lower flow rates, in order to prevent pressure surges and noise.

Load units LU for the determination of the inner pipe diameters

Table 13

PP pipe SDR 6													
maximum load value	LU	**1**	**2**	**3**	**3**	**4**	**6**	**13**	**30**	**70**	**200**	**540**	**970**
greatest single value	LU			2			4	5	8				
$d_a \times s$	mm	**16** × 2.7			**20** × 3.4			**25** × 4.2	**32** × 5.4	**40** × 6.7	**50** × 8.4	**63** × 10.5	**75** × 12.5
d_i	mm	10.6			13.2			16.6	21.2	26.6	33.2	42	50
max. pipe length	m	20	12	8	15	9	7						

Example: Determining the inner pipe diameter for standard installations

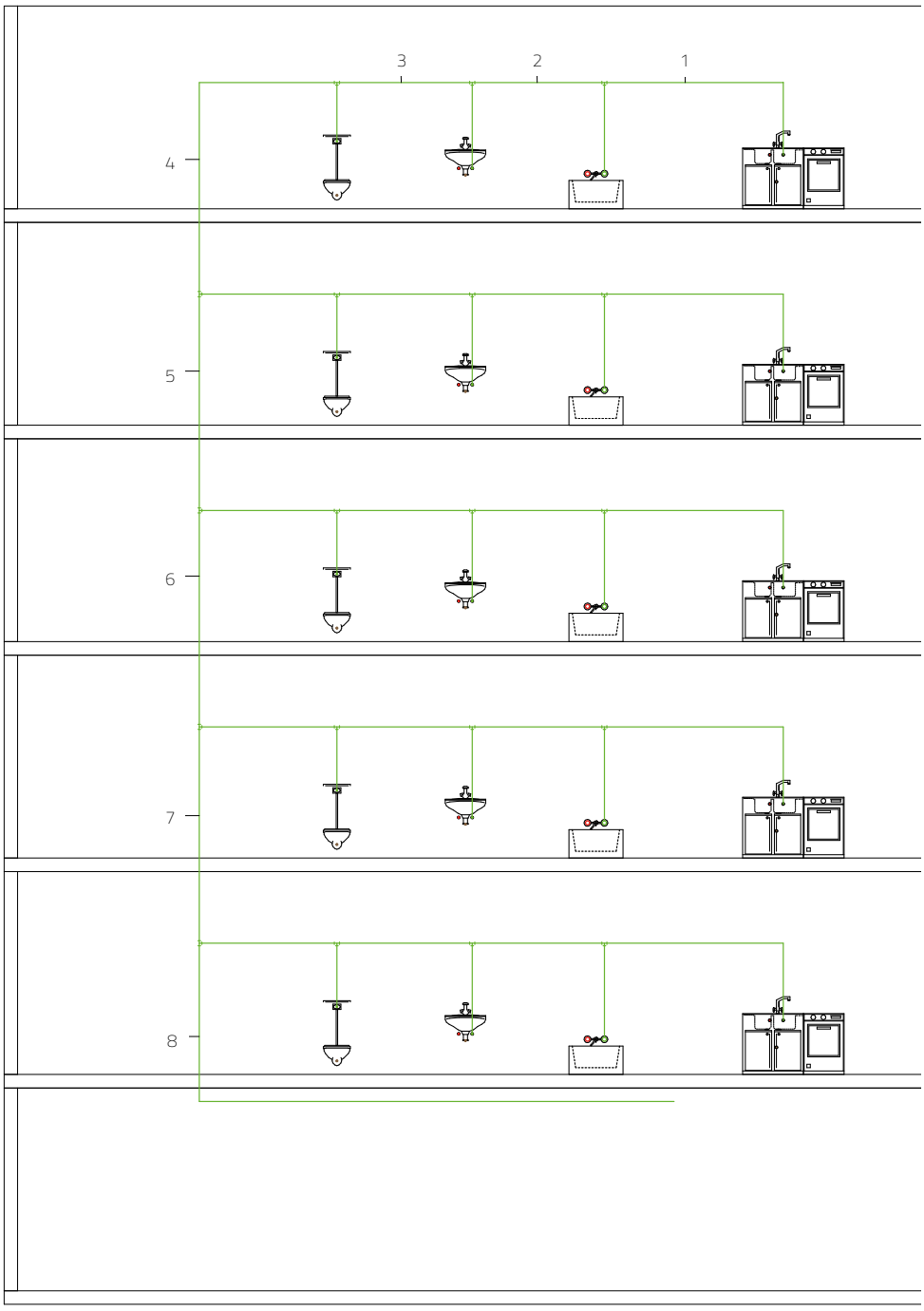

PLANNING AND DESIGN

Implementation
Starting from the farthest tapping point, the load units for the individual pipe sections must be added. Then, the inner pipe diameters are determined.

Definition of tasks in accordance with the installation plan
Calculate the cold water pipe leading from the basement to the tapping points. Calculate the pipeline as required for plastic pipes made of PP.

The following tapping points are installed in every apartment:
1 bath tub
1 WC with cistern
1 wash basin
1 household kitchen sink
There are five similar apartments in total.

Solution
The load units are to be determined according to Table 13:

1 bath tub	4 LU
1 WC with cistern	1 LU
1 wash basin	1 LU
1 household kitchen sink	2 LU

Section 1

1 kitchen sink connected	= 2 LU

Table 13 shows 2 LU = pipe 16 mm, maximum length 8 m

Section 2

1 kitchen sink connected	= 2 LU
1 bath connected	= 4 LU
Total	= 6 LU

Table 13 shows 6 LU = pipe 20 mm, maximum length 7 m

Section 3

1 kitchen sink connected	= 2 LU
1 bath connected	= 4 LU
1 wash basin connected	= 1 LU
Total	= 7 LU

Table 13 shows 7 LU = pipe 25 mm

Section 4

1 kitchen sink	= 2 LU
1 bath	= 4 LU
1 wash basin	= 1 LU
1 cistern	= 1 LU
Total for 1 apartment	= 8 LU

Table 13 shows 8 LU = pipe 25 mm

Section 5
2 apartments connected = 16 LU
Table 13 shows 16 LU = pipe 32 mm

Section 6
3 apartments connected = 24 LU
Table 13 shows 24 LU = pipe 32 mm

Section 7
4 apartments connected = 32 LU
Table 13 shows 32 LU = pipe 40 mm

Section 8
5 apartments connected = 40 LU
Table 13 shows 40 LU = pipe 40 mm

6.1 Basic information

6.1.1 Socket welding using a heated tool

Before starting the work, make sure that the welding tools lie flat against the heated rod. Do not use pliers or other unsuitable tools for the assembly, to avoid damage to the coating of the welding tools.

The required welding temperature for processing the ECOSAN installation system is 250 to 270 °C.

Warning:
- **Danger of burns from hot welding equipment**
- **The first welding should not be carried out until five minutes after the welding temperature has been reached!**

ECOSAN welding equipment and welding tools must be protected against impurities. Burned-on particles can lead to faulty welding connections. Tools may be cleaned with non-fibrous, coarse paper towels. The welding tools must be kept dry at all times.

Damaged and soiled welding tools must be replaced, since only impeccable processing tools can ensure impeccable connections.

Connect the components during the welding process without twisting the parts. Minor corrections can only be made immediately after the parts are connected.

6.1.2 Guidelines

General work protection and accident prevention guidelines are to be observed when using welding equipment.

The Guidelines of the Industrial Trade Associations of the Chemical Industry for Machines for the Processing and Employment of Plastics, Chapter: Welding Machines and Equipment, apply.

For the handling of ECOSAN welding equipment, machines and tools, the General Guidelines DVS 2208, Section 1 apply. In order to establish a connection between the ECOSAN pipe and the fitted part, the welding tools used must correspond to the measurements as stipulated by procedure A.

In accordance with DVS Guidelines, control of the necessary application temperature using quick-display surface temperature thermometers is permissible.

6.2 Processing information for welding

Parameters for socket welding with a heated tool

Table 14

Outer pipe diameter	Insertion depth	Heating period for SDR 11, SDR 7.4, SDR 6		Changeover period (maximum period)	Cooling period	
					fixed	total
mm	mm	at 20°	below +5°	s	s	min
20	14	5	8	4	6	2
25	15	7	11	4	10	2
32	16.5	8	12	6	10	4
40	18	12	18	6	20	4
50	20	18	27	6	20	4
63	24	24	36	8	30	6
75	26	30	45	8	30	6
90	29	40	60	8	40	6
110	32.5	50	75	10	50	8
125	35	60	90	10	60	8

Note: heating element temperature 250 to 270 °C

Instructions for socket welding can be found in DVS brochure no. 2207, Section 11, "Socket welding with a heated tool – welding of thermoplastic plastics and pipelines made of polypropylene (PP)". ECOSAN socket welding is performed according to these guidelines.
In this process, pipes and fittings are welded overlapping. The end of the pipes and fittings are heated using a welding device and are subsequently connected.

6.2.1 Socket welding with a hand-held welding device, from 20 mm

The following points should be observed:

1. The welding device should be equipped with the appropriate welding tools. Welding bushes and core rods have a Teflon coating. In order to avoid damaging the Teflon coating, never use pliers or similar tools for assembly. Please use a suitable hexagon socket wrench.

2. Switch on the welding device.

3. Using a thermometer or a temperature control pin, check welding temperature before starting to weld.

4. The ends of the pipes must be cut straight. Use appropriate pipe scissors or cutters. Pipe, fittings and welding tools must be clean.
   If necessary, clean them with a lint-free cloth.

5. Fitting and pipe must be inserted quickly and axially, without twisting, into the corresponding welding tools. The parts to be welded are then heated without pressure according to the table.

6. After the required heating time, fitting and pipe are to be removed quickly from the heating element and connected immediately by pushing together without twisting until insertion depth or markings have been reached. A double roll provides a visual guide to determine the correct welding (see DVS brochure 2207, Section 11).
   The line markings on the fittings and the pipe ensure the proper alignment of the pipes.

7. Pressure due to subsequent installation works must not be exerted upon the welded connection until after the end of the cooling period.

8. If necessary, clean the welding tools after each use.

6.2.2 Socket welding with a stationary welding machine, from 40 mm

6.2.2.1 Area of use

We recommend the use of a stationary welding machine for the welding of larger pipe diameters and for the pre-assembly of installation elements. The general guidelines provided by DVS brochure no. 2207, Section 11, "Socket welding with a heated tool. Detailed information on welding times." apply here.

6.2.2.2 Processing steps

1. Check the machine: Establish welding insertion depth by setting the dimension; make sure the welding temperature is reached.

2. Fix the moulded part with the clamp, taking care not to wind it too tightly, as this can lead to ovality, with a negative impact on the resulting weld. Make sure the moulded part is correctly positioned; use counter-tension to prevent the possibility of slipping.

3. Place the pipe loosely into the jaw chuck.

4. Adjust the dimension using the rotary button, which sets the precise welding insertion depth.

5. Push both tools together until they reach the stop.

6. Push the pipe as far as the fitting, then tighten. Make sure that the welding partners are accurately aligned. Open the welding tool.

7. Insert the welding device. Using the crank, gradually push the fitting and the pipe into the tool until the stop is reached. Pay attention to the welding time.

8. The welding period begins when the pipe and the fitting have been fitted together closely. Allow them to heat up without exerting any further pressure. Once the heating time has elapsed, move the tools apart, remove the welding device, and fit together the fitting and the pipe.

9. Observe the required cooling time.

6.2.3 Welding saddle for 40–250 mm

6.2.3.1 Area of use

- **subsequent extension of existing pipe systems**
- **alternative use instead of tees**
- **direct branching of a service line to a supply line**
- **simple assembly of sensor sleeves**

6.2.3.2 Processing steps

1. Before you start the work, prepare material and tools. Ensure that the welding saddle, the drill and the welding tool have the same diameters.

2. Uncover the pipe at the exact location where the welding saddle is supposed to be welded, and mark the welding area. Drain existing pipes and vent the pressure.

3. Prepare the welding device and the saddle welding tools for the polyfusion welding and heat to operating temperature (250 to 270 °C).

4. Drill through the marked pipe wall with the POLYMELT Plastic Drill and clear any cuttings from the drill hole.

5. The parts and areas to be welded must be clean and dry.

6. Push the welding plate into the hole in the wall of the pipe using a suitable and aligned saddle tool, until the tool reaches its stop position. At the same time the weld-in saddle must be pushed in, until the saddle surface reaches the camber of the tool.

7. The heating time for the pipe and fittings for the drilled hole dimensions DN 25 and 32 mm is 25 seconds for all dimensions.

8. Once the heating time has elapsed, remove the welding device, push the heated weld-in saddle straight into the heated hole as far as it will go without turning it, and hold the pipe in position for at least 20 seconds applying the necessary pressure.

9. After a cooling period of at least 10 minutes, the connection can withstand a full load.

6.2.4 Repair plugs

6.2.4.1 Area of use

- **the repair of punctured (drilled) pipes**

6.2.4.2 Processing steps

1. Drain pipes.
2. Uncover damaged pipe.
3. Drill damaged area of pipe out to a diameter of 8 mm at a right angle to the pipe.
4. Heat up drill hole and repair plug with ECOSAN hole welding tool for 15 seconds.
5. Insert repair plug immediately.
6. Cut off protruding end of repair plug.
7. The repaired area of pipe has reached full strength after approx. 5 minutes.

6.2.5 Use of electric welding sockets

6.2.5.1 Area of use

- **welding in constrained positions and in areas with restricted space**
- **repair welding**
- **alternative processing option for large pipe dimensions**

6.2.5.2 Preparation

1. General information and controls

Cleanliness – besides the correct operation – is the most important requirement for achieving good welding results! For the sockets to stay thoroughly clean, they need to be left in the original packaging until they are used. Furthermore, the surface of the pipe must be clean and undamaged. Incorrectly collapsed pipe ends must be cut off. We recommend PP-cleaner or cloths with ethyl alcohol for cleaning.

The pipe elements to be welded as well as the electric socket and the welding equipment must show precisely the same temperature level within the permitted temperature range (i.e. + 5 °C to 40 °C according to DVS 2207). (UV radiation or improper storage, to name two examples, can cause significant differences in temperature, which will result in faulty welding.)

2. Preparatory work

It is absolutely mandatory to maintain the order of the working steps!

1. Cut pipe ends at a right angle and burr them (control carved ends).
2. Remove any dirt from the pipe ends at the required length and dry them.
3. Mark the insertion depth of the electro-welded sockets at the pipe end.
4. Use a pipe scraper to remove the oxide film from the entire exposed pipe surface down to the marked insertion depth.
5. Clean thoroughly using ethyl alcohol. A homogeneous and impermeable welded connection can only be established, if the surface in the welding range is peeled and cleaned comprehensively.

Do not touch peeled pipe ends again and protect them from new contamination – e.g. put a clean plastic bag over them. Weld within 30 minutes after the peeling process.

3. Assembly of the electric welding socket

1. Carefully clean the inner surface of the socket using lint-free cloth. Mount the socket within 30 minutes after opening the packaging.
2. Slide the electric welding socket onto the clean and dry pipe end until you reach the marked insertion depth.
3. Completely remove the protective foil and slide the peeled and clean second pipe end into the electric welding socket.

Contaminations are to be avoided diligently and all parts must be securely fastened. Pipes must be free of flexural strain or self-weight when they are inserted into the electric welding socket. The socket should still be able to move the pipe ends after the mounting process. The air gap must be evenly distributed around the circumference. A joint that is not free of tension or that has shifted can result in undesired molten mass or in an inadequate connection. The pipe ends and welded sockets must be dry when mounted.

4. Welding process

1. Position the socket so that the air gap is evenly distributed around the circumference.
2. Set the welding equipment to the diameter of the welding socket.
3. Compare the data on the welding equipment's display screen with the details on the label; enter the required code manually or by scanning it (see barcode label on the electric welding socket).
4. Start the welding process and monitor it closely.

The joint must not be moved or put under external pressure during the entire welding process, until it has completely cooled off!
Once the welded connection has been successfully established, two pins remain visible as an outward sign.

5. Cooling-off time and pressure test

The welded pipe joint may only be put under pressure or moved, and the fastening may only be loosened once the cooling-off period has elapsed!
The minimum required cooling-off time is marked on the electric welding sockets. In case of ambient temperatures above 25 °C or when there is strong solar radiation, the cooling-off time must be extended accordingly!

In order to achieve an ideal and stable welding result, both pipe ends must be plane-parallel within the electric welding socket! It is imperative to mark the socket insertion depth on the pipe, and to adhere to it!

Type of strain	Compression strain	Minimum waiting period
Tension, bending, torsion of unpressurised pipelines		20 minutes
Testing or working pressure of pressurised pipelines	up to 0.1 bar	20 minutes
	0.1 bar to 1 bar	60 minutes
	over 1 bar	120 minutes
Repetition of welding process		60 minutes

6.2.6 Butt welding machine for 160 mm and above

Please also refer to the operating instructions for your welding equipment, which will provide the precise welding parameters.

Processing steps

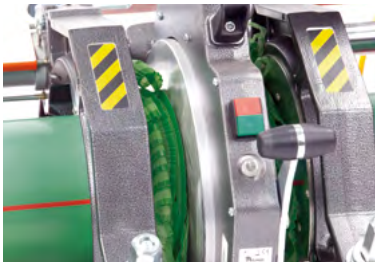

1. Protect the workplace against the effects of weather and against contamination by dirt.
2. Heat up the welding machine and check for proper function.
3. Cut the pipes at a right angle to the required length.
4. Align the pipes and tighten the clamping elements.
5. Using a milling machine, plane the front of the pipes at a uniform level and evenly.
6. Remove shavings and clean the front side with ethyl alcohol.
7. Maintain pipe offset (at most 0.1 × wall thickness).
8. Combine the pipes and check for a seamless connection (maximum tolerance 0.5 mm).
9. Set the joining pressure (refer to relevant table in the operating instructions of the welding machine).
10. Check welding temperature (210 °C).
11. Examine cleanliness of heated element before every operation.
12. Initiate welding process by swivelling the heated element and press the pipes onto the heating element using joining pressure.
13. After reaching the bead height, the pressure is reduced. This is the start of the warm-up time, which brings the pipe ends to the required welding temperature.
14. Once the warm-up time has elapsed, remove the heated element swiftly, and combine the pipes using the necessary pressure.
15. The pipes are now welded and will cool down under pressure.
16. Do not release or remove the welded joint from the clamps until the stipulated cooling-off period has elapsed.

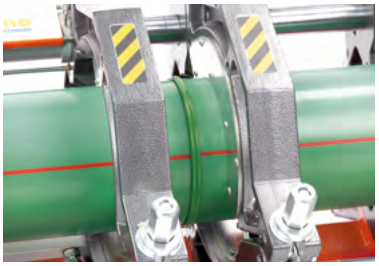

7.1 Fastening techniques

A pipe fastening system that complies with regulations is subject to the following requirements:
- **The fastening system must absorb any forces that may occur.**
- **The external impact upon pipes and fittings, caused e.g. by sagging, changes in length, mechanical load, must be prevented by applying appropriate fastening techniques.**
- **The pipework must be held firmly in the intended position.**

The fastening mechanism must be selected in accordance with the outside diameter of the pipe due to be fixed into position. Take appropriate measures to ensure that the pipe surface cannot be damaged by any of the pipe fastening elements.

Experience has shown that pipe clamps with rubber inserts represent the ideal fastening mechanism for POLY-MELT installation systems. In the selection of suitable fastening materials, we generally differentiate between fixed bearings and slide or guide bearings.

7.1.1 Fixed points

- **Fixed points are determined to divide the pipe line into individual sections, which helps to avoid uncontrolled pipe movement.**
- **These fixed points need to be designed so as to compensate for the expansion forces arising from the pipe and possibly existing additional loads.**
- **Short distances in the ceiling should be chosen as the clamp and the fastening element need to be fastened tightly because of the forces that arise here.**

7.1.2 Sliding points

- **They have to compensate for the axial pipe movement without causing any damage.**
- **When positioning the sliding points, care must be taken that no fittings or fixtures obstruct the pipeline movement.**

7.2 Mounting distances

Tables for the determination of the distance between clamps, depending on temperature and outside diameter. The values specified are POLYMELT recommendations, and are valid for horizontal and vertical installations.

ECOSAN pipes SDR 6, SDR 7.4, SDR 11

Dimension in mm	Media temperature [°C]						
	10	20	30	40	50	60	70
	Mounting distances [cm]						
20	80	70	65	65	65	60	60
25	90	80	75	75	75	70	70
32	100	90	85	85	85	80	80
40	110	100	95	95	95	90	90
50	140	120	115	110	105	100	100
63	160	140	130	125	120	110	110
75	180	150	140	135	130	120	120
90	210	160	150	150	140	130	130
110	240	180	170	160	150	140	140
125	260	200	185	170	160	150	150

ECOSAN pipes with pipe supports SDR 6, SDR 7.4, SDR 11

Dimension in mm	Media temperature [°C]	
	10	70
	Mounting distances [cm]	
20	170	150
25	200	180
32	220	200
40	230	210
50	230	230
63	230	230
75	230	230
90	230	230
110	230	230

ECOSAN ML5, SDR 7.4, SDR 9, SDR 11

Dimension in mm	Media temperature [°C]						
	10	20	30	40	50	60	70
	Mounting distances [cm]						
20	110	95	90	85	85	80	70
25	120	105	105	95	95	90	80
32	140	120	120	110	110	105	95
40	160	140	135	125	125	120	110
50	185	155	155	145	145	135	130
63	200	175	175	165	165	155	145
75	215	190	190	175	175	165	155
90	230	210	210	195	195	180	180
110	250	220	220	210	200	200	190
125	250	240	225	215	195	185	170
160	280	270	245	235	205	195	180
200	285	275	250	240	210	205	185
250	290	280	255	245	215	200	190

7.3 Laying the pipes

In the case of pipes laid in walls and ceilings, the friction forces that occur prevent the expansion of the pipes, and therefore no compensation is necessary. The resulting tension is absorbed by the pipe materials.

Due to the low expansion forces, the masonry or the plaster are not damaged.

Installing pipes in a shaft

- **Changes in length can be disregarded if pipes are laid in a vertical shaft.**
- **It will be sufficient to mount a fixed-point clamp ahead of every branching; in a rising pipe, all clamps are fixed points.**
- **Rising pipes can be laid without expansion elbows.**
- **The distance between two fixed points must not be greater than 3 m.**

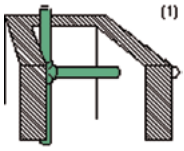

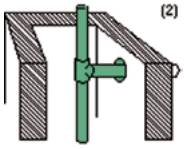

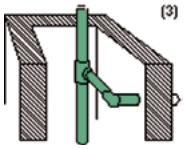

Open laying of pipes

- **Such pipes need to be laid using fixed and slide points. This will ensure sufficient space for the pipe to expand.**
- **If the line length equals or exceeds 40 m, expansion must be compensated for using bending legs and angles.**

Concealed laying

- **No precautions required.**

7.4 Length variation

Changes in the length of pipes are dependent on the increasing temperature of the pipe material. This temperature change can be caused by different installation and operating temperatures, as well as varying media temperatures. The potential variation in length must be taken into account at the time of installation.

If the operating temperature is higher than the installation temperature, the pipe will elongate. If the media temperature (e.g. cold water) is lower than the installation temperature, the calculation will result in a reduction in length.

The following factors must be considered in the calculation of the variation in length:
- installation temperature
- operating temperatures (media temperatures)
- temperature difference between installation and operating temperatures
- coefficient of linear expansion
- pipe length

The coefficient of linear expansion α for PP-R and PP-RCT pipes are:
- PP-R/PP-RCT single layer pipe α = 0.15 mm/mK
- PP-R/PP-RCT single layer pipe with metal support α = 0.05 mm/mK
- PP-R/PP-RCT pipe with fiber reinforcement α = 0.035 mm/mK

The formula for the calculation of the variation in length is:

$\Delta L = \alpha \times l_0 \times \Delta T$		
ΔL	variation in length	mm
l_0	pipe length prior to temperature change	m
α	length variation coefficient	$\frac{mm}{m \times K}$
ΔT	maximum occurring temperature difference between installation and operating temperature	K

Example:
PP-R pipe SDR 6
Length: 14 m
Installation temperature: 20 °C
Operating temperature: 60 °C

$$l = 0.15 \frac{mm}{m \times K} \times 14\ m \times (60 - 20)\ K$$
$$l = 84\ mm$$

Calculation with fiber pipe:
l = 19,6 mm

ASSEMBLY GUIDELINES

Linear expansion tables

ECOSAN pipe								
pipe length in meters (m)	difference in temperature ΔT (K)							
	10	20	30	40	50	60	70	80
1,0	1,5	3,0	4,5	6,0	7,5	9,0	10,5	12,0
2,0	3,0	6,0	9,0	12,0	15,0	18,0	21,0	24,0
3,0	4,5	9,0	13,5	18,0	22,5	27,0	31,5	36,0
4,0	6,0	12,0	18,0	24,0	30,0	36,0	42,0	48,0
5,0	7,5	15,0	22,5	30,0	37,5	45,0	52,5	60,0
6,0	9,0	18,0	27,0	36,0	45,0	54,0	63,0	72,0
7,0	10,5	21,0	31,5	42,0	52,5	63,0	73,5	84,0
8,0	12,0	24,0	36,0	48,0	60,0	72,0	84,0	96,0
9,0	13,5	27,0	40,5	54,0	67,5	81,0	94,5	108,0
10,0	15,0	30,0	45,0	60,0	75,0	90,0	105,0	120,0
15,0	22,5	45,0	67,5	90,0	112,5	135,0	157,5	180,0
20,0	30,0	60,0	90,0	120,0	150,0	180,0	210,0	240,0
25,0	37,5	75,0	112,5	150,0	187,5	225,0	262,5	300,0
30,0	45,0	90,0	135,0	180,0	225,0	270,0	315,0	360,0
35,0	52,5	105,0	157,5	210,0	262,5	315,0	367,5	420,0
40,0	60,0	120,0	180,0	240,0	300,0	360,0	420,0	480,0
45,0	67,5	135,0	202,5	270,0	337,5	405,0	472,5	540,0
50,0	75,0	150,0	225,0	300,0	375,0	450,0	525,0	600,0
	linear expansion ΔL in mm							

ECOSAN pipe with pipe support								
pipe length in meters (m)	difference in temperature ΔT (K)							
	10	20	30	40	50	60	70	80
1,0	0,5	1,0	1,5	2,0	2,5	3,0	3,5	4,0
2,0	1,0	2,0	3,0	4,0	5,0	6,0	7,0	8,0
3,0	1,5	3,0	4,5	6,0	7,5	9,0	10,5	12,0
4,0	2,0	4,0	6,0	8,0	10,0	12,0	14,0	16,0
5,0	2,5	5,0	7,5	10,0	12,5	15,0	17,5	20,0
6,0	3,0	6,0	9,0	12,0	15,0	18,0	21,0	24,0
7,0	3,5	7,0	10,5	14,0	17,5	21,0	24,5	28,0
8,0	4,0	8,0	12,0	16,0	20,0	24,0	28,0	32,0
9,0	4,5	9,0	13,5	18,0	22,5	27,0	31,5	36,0
10,0	5,0	10,0	15,0	20,0	25,0	30,0	35,0	40,0
15,0	7,5	15,0	22,5	30,0	37,5	45,0	52,5	60,0
20,0	10,0	20,0	30,0	40,0	50,0	60,0	70,0	80,0
25,0	12,5	25,0	37,5	50,0	62,5	75,0	87,5	100,0
30,0	15,0	30,0	45,0	60,0	75,0	90,0	105,0	120,0
35,0	17,5	35,0	52,5	70,0	87,5	105,0	122,5	140,0
40,0	20,0	40,0	60,0	80,0	100,0	120,0	140,0	160,0
45,0	22,5	45,0	67,5	90,0	112,5	135,0	157,5	180,0
50,0	25,0	50,0	75,0	100,0	125,0	150,0	175,0	200,0
	linear expansion ΔL in mm							

ECOSAN ML5, UV ML5								
pipe length in meters (m)	difference in temperature ΔT (K)							
	10	20	30	40	50	60	70	80
1,0	0,4	0,7	1,1	1,4	1,8	2,1	2,5	2,8
2,0	0,7	1,4	2,1	2,8	3,5	4,2	4,9	5,6
3,0	1,1	2,1	3,2	4,2	5,3	6,3	7,4	8,4
4,0	1,4	2,8	4,2	5,6	7	8,4	9,8	11,2
5,0	1,8	3,5	5,3	7	8,8	10,5	12,3	14
6,0	2,1	4,2	6,3	8,4	10,5	12,6	14,7	16,8
7,0	2,5	4,9	7,4	9,8	12,3	14,7	17,2	19,6
8,0	2,8	5,6	8,4	11,2	14	16,8	19,6	22,4
9,0	3,2	6,3	9,5	12,6	15,8	18,9	22,1	25,2
10,0	3,5	7	10,5	14	17,5	21	24,5	28
15,0	5,3	10,5	15,8	21	26,3	31,5	36,8	42
20,0	7	14	21	28	35	42	49	56
25,0	8,8	17,5	26,3	35	43,8	52,5	61,3	70
30,0	10,5	21	31,5	42	52,5	63	73,5	84
35,0	12,3	24,5	36,8	49	61,3	73,5	85,8	98
40,0	14	28	42	56	70	84	98	112
45,0	15,8	31,5	47,3	63	78,8	94,5	110,3	126
50,0	17,5	35	52,5	70	87,5	105	122,5	140
	linear expansion ΔL in mm							

7.5 Thermal expansion force

The following formula can be used to calculate the thermal expansion force:

$$F_t = \frac{E \times A \times \alpha \times \Delta T}{1000}$$

F_t = thermal expansion force [N]
E = modulus of elasticity (modulus of rigidity) [MPa = N/mm²]
A = cross-sectional area of the pipe in [mm²]
α = specific thermal expansion coefficient [mm/(mK)]
ΔT = temperature difference resulting from media temperature minus laying temperature [K]

Material	Pipe dimension	Modulus of elasticity	Coefficient of linear expansion	Thermal Expansion Force
Steel	26,9 × 2,65	220.000	0,012	533
High-grade steel	22,0 × 1,2	200.000	0,015	235
Copper	22,0 × 1,0	130.000	0,016	137
Prostab	25,0 × 3,5	3.500	0,035	29
PVC	25,0 × 3,2	1.100	0,08	19
PP-R / PP RCT	25,0 × 4,2	900	0,150	12
PE-X	25,0 × 3,5	540	0,175	22
PE-RT	25,0 × 3,5	250	0,180	10
PE-X / Alu	26,0 × 3,0	3.500	0,030	22

This comparison shows that the thermal expansion forces occurring in plastic pipes are extremely low, compared to pipes made of metallic materials

If the thermal expansion force is countered by a corresponding retention force, the expansion can be neutralised effectively.

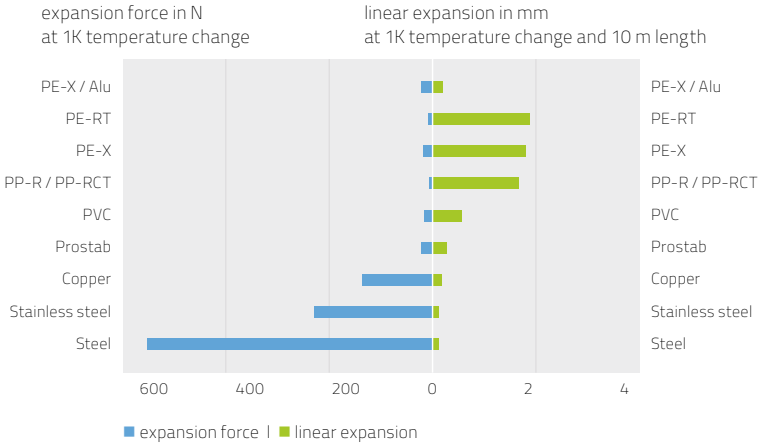

7.6 Expansion compensation

Variations in length caused by temperature differences must be taken into account during the planning stage to prevent subsequent damage to pipelines, fastening elements and the building structure. In order to keep the occurring stress impacts within acceptable ranges, the variation in length must be compensated appropriately. There are two options available to achieve this compensation:

- Expansion compensation using bending legs and a U-pipe bends ("natural" expansion compensation)
- Expansion compensation using compensators ("artificial" expansion compensation)

In most cases, directional changes in the pipe routeing can be utilised to absorb the variation in length. Should the directional changes not be sufficient, a U-pipe bend must be used.

It is important to bear in mind that the outlets distributed throughout the line system can also influence the variation in length, or may be negatively affected themselves by the variation in length.

Please refer to the manufacturers of the compensators for more information on the expansion compensation provided by compensators.

7.6.1 Bending legs

In order to determine the specific direction in which the expansion compensation is steered, the directional change is installed between two fixed points. Generally, the pipes are arranged in right angles at the points where the direction changes. A variation in the length of one leg produces bending in the other leg. Provided that all legs are of a sufficient length to prevent the resulting flexural strain from becoming too great, the system can flexibly absorb the variation in length.

$l_B = K \times \sqrt{d \times \Delta L}$		
l_B	length of the bending leg	mm
K	material-dependent constant (15.0 for PP)	
d	outside pipe diameter	mm
ΔL	variation in length	mm

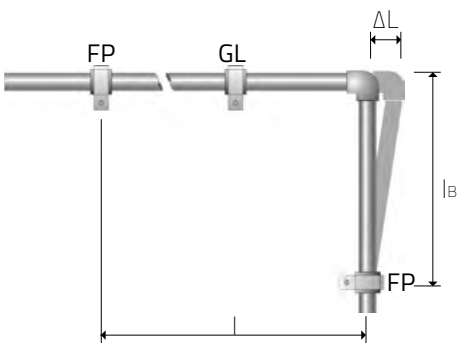

Sample calculation:
Pipe outside diameter 75 mm
Variation in length 84 mm

$l_B = 15 \times \sqrt{75\ mm\ 84\ mm}$
$l_B = 1191\ mm$

7.6.2 Expansion loop

If it is not possible to compensate for the variation in length by introducing directional changes into the pipe routeing, an expansion loop must be used instead.
For the implementation of the expansion loop, the length l_B of the bending leg and the width b_{min} of the expansion loop must be considered. It is advisable to position the expansion loop in such a way that the lengths l_1 and l_2 are equal.

$b_{min} = 2 \times \Delta L + SA$		
b_{min}	minimum width of the expansion	mm
ΔL	variation in length	mm
SA	safety clearance = 150	mm

Sample calculation:
Variation in length $\Delta L = 84$ mm

$b_{min} = 2 \times 84$ mm + 150 mm
$b_{min} = 318$ mm

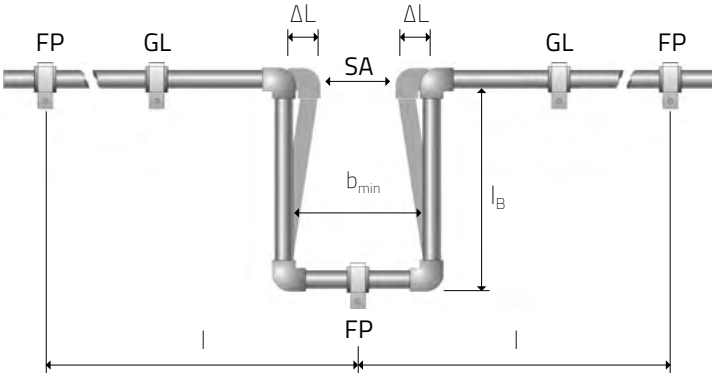

7.6.3 Pre-tensioning

If, during installation, an expansion loop is already pre-stretched by the length ΔL_V against the subsequent length variation and is thus "pre-tensioned", the length of the bending leg l_{BV} can be reduced.

$l_{BV} = l_B \times \sqrt{1 - \frac{\Delta L_V}{\Delta L}}$		
ΔL_V	variation in length with pre-tensioning	mm
ΔL	variation in length	mm
l_{BV}	length of bending leg with pre-tensioning	mm
l_B	length of bending leg	mm

Sample calculation:
Variation in length $\Delta L = 84$ mm
Pre-tensioning $\Delta L_V = 42$ mm

$l_{BV} = 1191 \text{ mm} \sqrt{\times 1 - \frac{42}{84}} \text{ mm}$
$l_{BV} = 842$ mm

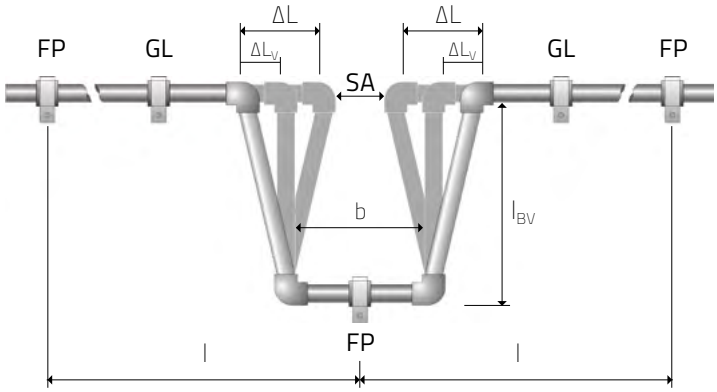

7.7 Insulation

The EnEV (German Energy Saving Regulation) standard regulates the thermal insulation of pipelines and fittings within the Federal Republic of Germany. The purpose of the pie insulation is to:

- Protect the pipes against condensation
- Protect the cold water pipes against exposure to heat
- Minimize heat losses
- Reduce the transfer of heat to structural components
- Reduce sound transmission
- Protect against UV radiation
- Absorb variations in length caused by temperature
- Protect against mechanical stresses
- Protect against corrosion

7.7.1 Hot water insulation

Requirements according to EnEV

Table 15: Thermal insulation of heat distribution and hot water pipelines as well as fittings.

Table 15

Line	Type of pipeline / valves and fittings	Minimum thickness of the insulation layer, based on a thermal conductivity of 0.035 W/(m k)
1	Inner diameter up to 22 mm	20 mm
2	Inner diameter above 22 mm up to 35 mm	30 mm
3	Inner diameter above 35 mm up to 100 mm	equal to inner diameter
4	Inner diameter above 100 mm	100 mm
5	Pipes, valves and fittings acc. to lines 1 to 4 in wall and ceiling breaks, at the intersection of lines, at line connection points, at central mains system switches	½ of the requirements listed in lines 1 to 4
6	Central heating pipes acc. to lines 1 to 4, that have been installed in buildings between heated rooms of various users since January 31, 2002	½ of the requirements listed in lines 1 to 4
7	Pipes acc. to line 6 installed in floor constructions	6 mm
8	Cold distribution and cold water pipes as well as fittings for ventilation and cooling systems	6 mm

When using materials with thermal conductivity values other than 0.035 W/(m K), the minimum thickness values of the insulation layers must be converted accordingly. The calculation methods and values contained within accepted engineering standards must be employed for the conversion and the thermal conductivity of the insulation material.

In the case of heat distribution and hot water pipes, as well as cold distribution and cold water pipes, the minimum thickness values of the insulation layers listed in Table 5 may be reduced to the extent of the equivalent limitation of heat absorption or loss, and the insulating effect of the pipe walls must be taken into account.

7.7.2 Cold water insulation

Guide values for the minimum thickness of insulating layers used to insulate cold drinking water systems against heat and condensation.

Insulation layer thickness acc. to DIN 1988-200, Table 16

Table 16

Installation situation	Insulation layer thickness at λ = 0.040 W/mK*
Exposed pipes in unheated rooms (e.g. basement)	9 mm
Exposed pipes in heated rooms	13 mm
Pipes installed in a duct, without pipes carrying high-temperature media	13 mm
Pipes installed in a duct, alongside pipes carrying high-temperature media	13 mm
Pipes installed in wall slots, rising pipes	4 mm
Pipes installed in wall recesses, alongside pipes carrying high-temperature media	13 mm
Pipes installed on concrete floor (also alongside non-circulating hot water lines)	4 mm

*) If materials with different thermal conductivity coefficients are used, the insulation layer thickness must be converted accordingly in relation to a pipe diameter of d = 20 mm.

The temperature increase of drinking water is primarily influenced by the duration of stagnation, the position and arrangement of the pipes, and by the insulation used. Care must be taken during installation of pipelines to maintain a sufficient distance to all heat sources such as warm pipes, flues, and heating pipes.

In the case of standing water, even insulation measures cannot provide long-term protection against warming.

7.7.3 Dew point

Condensation occurs when the temperature of a surface falls below the saturation temperature of the surrounding air.
The saturation temperature of the air is determined from the current temperature and the relative humidity.
The temperature of the surface is determined by the heat transfer from the material to the pipe surface, from the air to the pipe surface, and the heat transfer through the pipe wall.

Data required in order to determine the dew point:

- **Relative air humidity**
- **Ambient temperature**
- **Water temperature**
- **Temperature difference $\Delta\vartheta$ in K (room temperature – water temperature)**

Sample calculation:

At an ambient temperature of 27 °C, 60 % relative humidity and 12 °C water temperature the pipe begins to sweat.

- **For SDR 6 pipes the maximum temperature difference is 15 K.**
- **For SDR 11 pipes the maximum temperature difference is 11 K.**

ASSEMBLY GUIDELINES

Diagram for the determination of the dew point for ECOSAN SDR 6

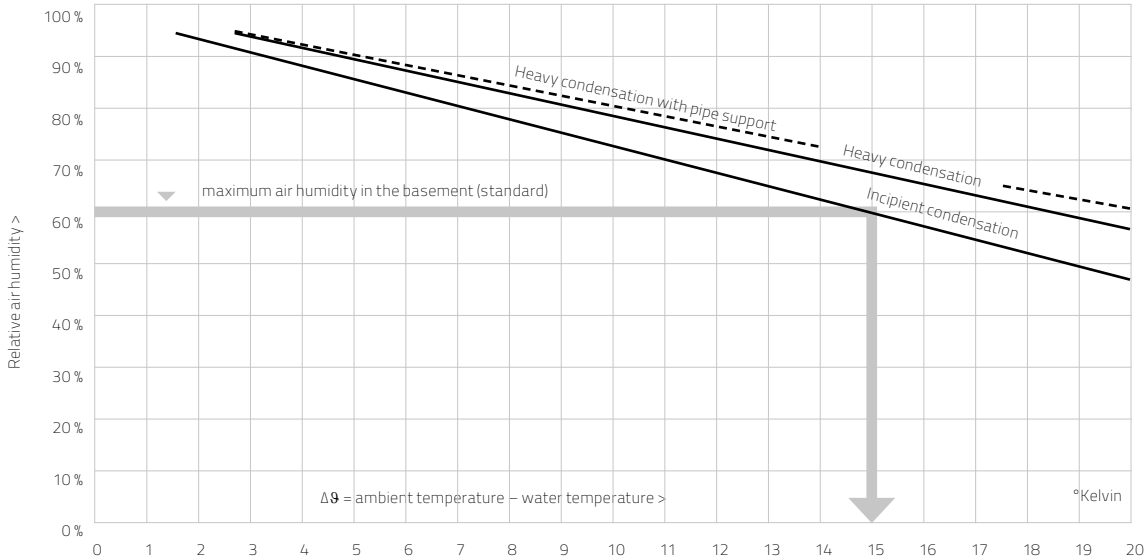

Sample calculation: water temperature in summer 12°, Δϑ max. = 15° > ambient temperature max. 27 °C = incipient condensation

Diagram for the determination of the dew point for ECOSAN SDR 11

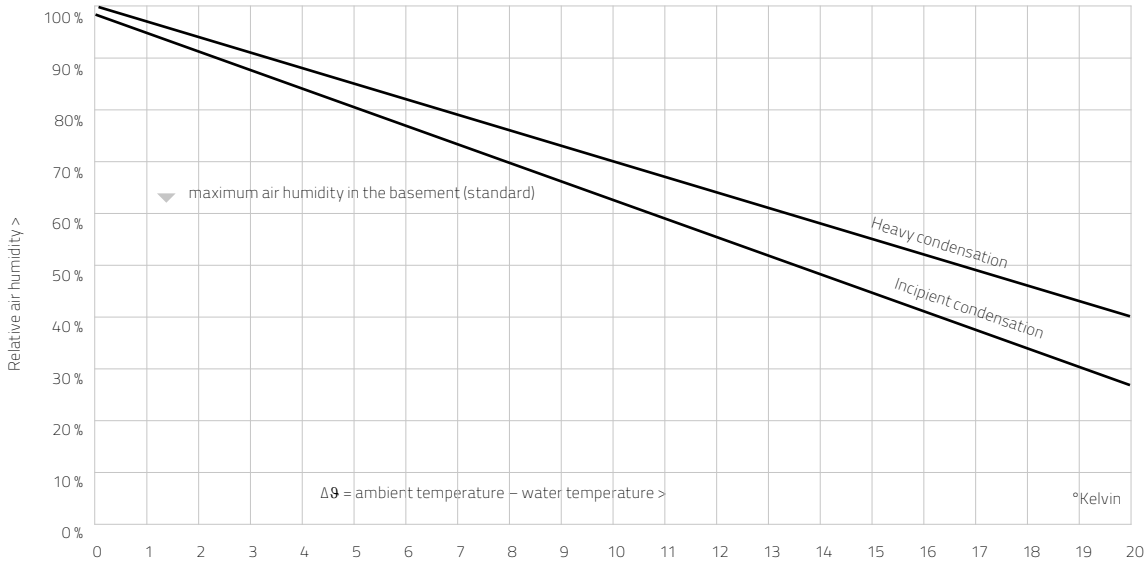

7.8 Noise protection

In order to prevent the transmission of structure-borne noise from the pipe system to the building, sound insulation preventing structure-borne sound must be applied to the pipes. This can be achieved through tape bindings, insulating hoses or through sheathed half-shells. This type of insulation dampens the transmission of flow noise as well as noises from machine parts (pumps) to the structural components surrounding the pipes. Standard DIN 4109 with Supplementary Table A1 regulates the minimum requirements of sound insulation in buildings, given varying requirements and taking into account the source of noise. The following sound pressure levels in dB(A) are admissible.

Admissible sound pressure levels in rooms requiring sound protection against noise from building services and commercial enterprises

	Characteristic sound pressure level dB(A) in	
Source of noise	**Living rooms and bedrooms**	**Teaching and working spaces**
Plumbing applications (both water supply- and wastewater systems)	≤ 30 [1) 2)]	≤ 35 [1) 2)]
Other building services systems	≤ 30 [3)]	≤ 35 [3)]
Businesses during the day 6 a.m. to 10 p.m.	≤ 35	≤ 35 [3)]
Businesses during the night 10 p.m. to 6 a.m.	≤ 25	≤ 35 [3)]

1) Single, short-term spikes that occur when operating valves and devices in accordance with Table 6 DIN 4109 (opening, closing, adapting, interrupting, etc.) can be disregarded at this time.

2) Conditions stipulated in the contract for work to meet the admissible installation sound pressure level:
- The construction documents must take into account the requirements of noise protection, which means that – amongst other requirements to be observed – the necessary sound insulation certificates must be provided for the components used.
- Furthermore, construction management must be named and involved before an installation is closed in or covered. Further details are regulated by the ZVSHK Bulletin (Central Association for Plumbing, Heating, Air Conditioning).

3) In the case of ventilation systems the values are permitted to be 5 dB(A) higher, provided that the noise is constant noise, without distinct audible sounds.

7.9 Fire protection

The ECOSAN installation system is classified as follows:

Standard	Classification
EN 13501	E
DIN 4102	B2

EN 13501 and DIN 4102
These standards define the classification of those materials, which are used as products or as product components in building construction. The fire behaviour of the products used is tested and classified by testing the behaviour in the case of fire, e.g. the development and spread of fire and smoke.

The behaviour of PP-R in the case of fire
Pipes and fittings made of PP-R, PP-RCT and with fibres, do not exhibit an increased conflagration gas toxicity. In construction objects with a greater need for fire protection measures, pipe ducts through walls and ceilings must be protected against fire in such a way that, as a general principle, all pipe ducts have the same classification as the structural components through which the ducts lead.

For example: In the case of a wall, which features a fire resistance period of 90 minutes (F90), the pipe ducting must also have a fire resistance period of 90 minutes (R 90).

All fire protection systems that have been issued with a corresponding accreditation can be used with ECOSAN pipes.

One possible solution is the fire protection measure using fire protection collars or special mineral insulation with a melting temperature of > 1,000 °C.

BSM F

Fire load

The resulting combustion heat V(kWh/m) of ECOSAN pipes is dependent on the pipe dimension. The basis for the calculation of the combustion heat V for ECOSAN pipes made of PP-R is given by the lower calorific value
Hu = 12.2 kWh/kg (acc. to DIN 18230 Section 1), as well as the material mass m (kg/m).

Combustion values V (kWh/m) of ECOSAN pipes,
Table 17

Table 17

Outer diameter	PP R		
	SDR 11	SDR 6	SDR 7,4
20	1,31	2,1	1,80
25	2	3,25	2,79
32	3,25	5,3	4,44
40	5,03	8,19	6,95
50	7,78	12,81	10,84
63	12,32	20,13	17,05
75	17,32	28,55	24,25
90	24,77	41	34,76
110	36,72	61,49	51,88
125	47,54	77,84	

8.1 Pressure-tests

Upon completion of the installation work, drinking water installations inside buildings must be subjected to hydraulic pressure testing. This must be carried out while the pipe system is fully accessible. In accordance with DIN EN 806, the test can be carried out using water or, if national regulations permit, with oil-free clean air at low pressure or inert gases.
The choice of method to be applied must take into account the factors relating to hygiene and corrosion, and must be determined in relation to the design of the system and the time schedule of the construction project.

In order to pressure-test using water, the completed pipelines must be gradually filled with drinking water that does not contain particles ≥ 150 µm, and must then be vented. The drinking water system must be put into operation immediately after the pressure test with water and the subsequent flushing of the system. If this is not possible, the flushing process must be repeated regularly, with no more than 7 days between repetitions. If the system is due to be put into operation at a later stage, in the interest of hygiene, the pressure test should be conducted with air or inert gas as a testing medium.

Due to the characteristic properties of the materials used, plastic pipes expand for a limited period of time when they are subjected to pressure. This has an impact on the test result. A change in the temperature in a pipe system can lead to a change in pressure in the case of pipes made of plastic.
Consequently, pressure testing should follow the protocols provided below (page 86 and following).

Once the pressure tests have been completed, the responsible technician must produce a formal record, which includes an assessment of the test. The impermeability of the system must be evident, and must be confirmed in writing.

Pressure testing with water

DIN EN 806-4 stipulates that there are three possible pressure tests, depending on the different material properties. Due to issues concerning the practical feasibility on site, and following practical experiments, a modified method was selected, which is suitable for all materials and all material combinations.
The duration of the test was extended beyond the period stipulated in the standard, to ensure that even the smallest possible leaks can be detected during the leak test.

Pressure testing with air

As gases are compressible, when carrying out pressure testing using air, the accident prevention regulations "Working on Gas Installations" and the guidelines "Technical Rules for Gas Installations DVGW-TRGI" must be observed for physical and safety reasons. Therefore, acting in agreement with the responsible professional association and in observance of this body of rules, the testing pressures were fixed at a maximum of 0.3 MPa (3bar), corresponding to the stress and leak tests for gas lines. This fully complies with the national regulations.

The volume in the pipe system has a significant impact on the pressure results shown. Changes in temperature can also influence the test results. A high pipe system volume can have a negative impact on the determination of minor leaks using drops in pressure. Consequently, it can be helpful to divide the test into small sections, in order to achieve the best possible testing safety and accuracy.

Pressure Testing Protocol – Water

Construction project: .....

Construction stage: .....

Client represented by:.....

Contractor represented by: .....

Admissible operating pressure = ... bar

Test pressure = ... bar (Corresponds to 1.1 times the system operating pressure)

Water temperature ..... °C Ambient temperature ..... °C

System inspection as ☐ complete system ☐ in ..... sections

Preliminary arrangements:
- ☐ The pipe system is made of PP-R
- ☐ The pipe system is made of PP-R and/or with combined installations made of metal and multi-layer composite pipelines.
- ☐ All pipes have been sealed with metal plugs, caps, blanking plates or blank flanges
- ☐ Equipment, pressure tanks or drinking water heaters have been disconnected from the system.
- ☐ A visual inspection ensuring the professional execution of all pipe connections has been carried out.
- ☐ Filling water has been filtered. Filter size < 150 µm
- ☐ The drinking water system has been filled, flushed and de-aerated.

Leak Test

1. Establish testing pressure ..... bar [1] (minimum 1.1 x admissible operating pressure)
2. In the case of large temperature differences (> 10 °) between ambient temperature and the filling water, a 30-minute waiting period must be observed after testing pressure has been reached in order to achieve temperature equalization.
3. Testing period: 30 minutes
4. Use visual inspection of all connections and pressure gauge to check for obvious leaks.
5. Reduce pressure to 0.5 of testing pressure (e.g. from 15 bar to 7.5 bar)
6. Additional testing period: 30 minutes
7. Assessment:
   No drop in pressure (= 0) occurred during this period.

- ☐ Visual inspection of pipe system has been carried out
- ☐ No leaks were determined during the testing period.
- ☐ The pipe system is leak-proof

Place ..... Date .....

Client ..... Contractor .....

1) The pressure gauges used must allow a precise reading of a 0.1 bar change in pressure.

Pressure testing protocol testing media compressed air or inert gas

Construction project: .....

Construction stage: .....

Client represented by:.....

Contractor represented by:.....

Pipe system materials: .....

System operating pressure ..... bar ambient air temperature ..... °C

Temperature of testing medium ..... °C

Testing medium ☐ oil-free compressed air ☐ nitrogen ☐ carbon dioxide

System inspection as ☐ complete system ☐ in ..... sections

Preliminary arrangements:
☐ All pipes have been sealed with metal plugs, caps, blanking plates or blank flanges.
☐ Equipment, pressure tanks or drinking water heaters have been disconnected from the system.
☐ A visual inspection ensuring the professional execution of all pipe connections has been carried out.

1. Leak test [1)]
Testing pressure 150 mbar
Up to 100 litres pipe system capacity require a testing period of at least 120 minutes. For every further 100 litres, the testing period must be extended by 20 minutes.

Pipe system capacity: ..... litres Testing period: ..... minutes
The testing period starts, once the testing pressure has been reached, taking into account a waiting period for the equalization of the media temperature and the ambient temperature.
☐ Visual inspection of pipe system has been carried out
☐ Inspection by pressure gauge, U-pipe or respectively standpipe water column has been carried out [1)]
☐ No drop in pressure was determined during the testing period
☐ No leaks were determined during the testing period

2. Strength test with elevated pressure [2)]
Wait for temperature equalization and steady state in the case of plastic pipes; the testing period starts once these have been reached.
Testing pressure ≤ 63 mm maximum 3 bar Testing pressure > 63 mm maximum 1 bar
Testing period: 10 minutes

☐ No drop in pressure was determined during the testing period
☐ No leaks were determined during the testing period
☐ The pipe system is leak-proof

Place ..... Date .....

Client ..... Contractor .....

1) The pressure gauges used must allow a precise reading of a 1 mbar change in pressure.

2) The pressure gauges used must allow a precise reading of a 0.1 bar change in pressure.

8.2 Flushing the system

On principle, drinking water installations must be thoroughly flushed immediately upon completion, irrespective of the materials used. Flushing the system ensures that the following requirements are observed:

- Protection of drinking water quality
- Prevention of corrosion damage
- Prevention of functional damage to valves, fittings and equipment
- Cleaning of the inner surface of the pipes

According to EN 806-4 "Specifications for installations inside buildings conveying water for human consumption", it is necessary to flush the system for drinking water installations as soon as possible upon completion and immediately before putting them into operation. The following regulations must be observed.

- Perform the flushing on warm and cold water systems separately.
- The water must be filtered. The water must not contain any particles > 150 µm, as these can cause damage to the system.
- If the system is not put into operation immediately after the system is flushed, the flushing process must be repeated regularly, with no more than 7 days between repetitions.

Two flushing methods have proven successful in practice:

1. Flushing with water
2. Flushing with a water/air mixture

The following factors must be considered when applying method "1. Flushing with water":

- Jet regulators, sieves, flow regulators, shower heads or hand-held showers must be dismantled in order to protect them from damage and soiling, and to ensure the maximum possible flow through the pipes.
- All valves and shut-off devices must be fully opened.
- If the system rinse is carried out in sections, it must be started on the lowest floor and continued upwards, moving from floor to floor.
- During the rinsing process the minimum flow rate must be 2 m/s.
- The water content of the system must be completely exchanged at least 20 times.
- When opening the draw-off points, the first draw-off point to be opened must be the one furthest away from the rising pipe.
- Draw-off points are closed in the reverse order: moving from the rising pipe to the end.
- Each draw-off point must be fully opened.

8.3 Initial operation

- Do not fill the system with water until standard operation is imminent.
- Delays cause a hygienic risk. Flushing schedules or forced flushing should be carried out to ensure that the water is exchanged regularly.
- The operator should receive the basic planning documents, the records of leak and stress tests, as well as all flushing and training documents at the same time as the operating instructions.
- The operator must be informed that the regular exchange of the water must be ensured.
- The operator must be advised of the dangers presented by a microbiological contamination of then system caused by hot water temperatures that are too low, and cold water temperatures that are too high.
- The operator should be offered a maintenance contract.

Initial operation protocol: flushing with water

Construction project: .....

Construction stage: .....

Client represented by: .....

Contractor represented by: .....

Pipe system materials: .....

Guide values for the minimum number of draw-off points to be opened, with reference to the largest nominal width of the distribution pipe							
Largest nominal width of the distribution pipe DN in the current flushing section	25	32	40	50	65	80	100
Minimum number of draw-off points to be opened DN 15	2	4	6	8	12	18	28

Preliminary arrangements:

- ☐ Water for flushing has been filtered. Filter size < 150 µm
- ☐ Jet regulators, sieves, flow regulators, hand-held showers, shower heads have been dismantled
- ☐ Maintenance fittings (main shut-off device on each floor and other shut-off devices) have been fully opened
- ☐ Sensitive valves, fittings and equipment have been removed and replaced with adaptors

Sequence of the flushing process:

1. The flushing process is carried out in sections, starting at the main shut-off valve and moving towards the furthest draw-off point.
2. On each floor, those draw-off points located furthest away from the rising pipe are fully opened first.
3. All draw-off points are fully opened.
4. After a minimum rinsing period of 5 min (measured from the valve opened last) all draw-off points are closed in reverse order.

Start of the flushing process: .....

End of the flushing process:.....

Final steps:

- ☐ Built-in filters and strainers have been cleaned

The flushing of the drinking water system has been properly carried out.

Place ..... Date .....

9.1 Quality assurance

All incoming goods that are intended for use as raw and auxiliary materials for further processing, are checked for their suitability by POLYMELT Quality Assurance.

The manufacture of quality-controlled pipeline systems requires all necessary procedural steps:
- Monitoring
- Control
- Inspection

Furthermore, all results and procedures are documented.

The minimum requirements for independent company quality control are derived from the corresponding regulations for the quality control of sanitary pipeline systems, in that compliance must also include inspection by a neutral testing institution within the framework of external control.

External control, in addition to external testing of products, includes
- testing of the manufacturer's own required control measures
- examination of the technical equipment requirements
- hygienic and toxicological testing

External control of the ECOSAN Installation System in Germany is conducted by the
- Süddeutsches Kunststoffzentrum (Southern German Plastics Centre) (SKZ)
- Hygiene Institut (Hygiene Institute of) Karlsruhe (TZW),

which are authorised as testing centres by DVGW (German Association of Gas and Water Facilities), among others.

External control of approvals for foreign usage is conducted in a similar manner.

The suitability of the POLYMELT pipe systems for drinking water has been established by the Technology Water Centre (TWZ) according to the "Guideline for Hygienic Assessment of Organic Materials in Contact with Drinking Water" (KTW Guideline) provided by the German Federal Environmental Agency, and is subject to permanent external control.

Summary of key points:
- The entire production process is defined, monitored, documented
- Quality management according to DIN EN ISO 9001
- Complies with all applicable standards, laws and regulations
- Monitoring by external institutes
- Certified system

QUALITY MANAGEMENT

Quality assurance

The entire production process for POLYMELT pipe systems and fittings is monitored and controlled by POLYMELT quality assurance. All results and procedures are documented. The monitoring is carried out by external institutes and by self-monitoring.

Self-monitoring

↓

Tasks

↓

- Comply with all applicable standards, laws and regulations
- Laboratory testing of pipes and fittings
- Inspection of incoming goods
- Quality assurance in production processes

External monitoring

↓

By authorised testing institutes of the DVGW:
- Süddeutsches Kunststoffzentrum (Southern German Plastics Centre) (SKZ)
- Technologiezentrum Wasser (Technology Centre Water) in Karlsruhe

↓

Tasks

↓

- Testing of the manufacturer's self-monitoring
- Product testing
- Examination of the technical equipment requirements
- Hygienic and toxicological testing acc. to KTW guidelines

Our organisation is certified in accordance with ISO 9001

Das Kunststoff-Zentrum

SKZ

Certificate

The SKZ - Cert GmbH certifies to the company

POLYMELT

Polymelt GmbH
Kirnachstraße 17
87640 Ebenhofen

the introduction and application of a management system according to
ISO 9001:2015

Scope:
Development, production and sales of plastic pipe systems and components.

The proof has been furnished by an audit.

This certificate is valid from: **05.08.2024** to: **04.08.2027**
Certificate No.: **000878.Q/24.R**

Würzburg, 05.07.2024
Benjamin Kirchgeßner
Certification Body

DAkkS Deutsche Akkreditierungsstelle D-ZM-17265-01-00

SKZ - Cert GmbH
Friedrich-Berglus-Ring 22 • 97076 Würzburg • Tel. +49 931 4104-310 • cert@skz.de • www.skz.de

9.1.1 Approvals

- Tested by the accredited testing institute SKZ
- Hygienically safe in accordance with the KTW guideline of the Federal Environmental Agency
- Compliance with standards according to EN ISO 15874
- Certified by SKZ, DVGW, WRAS

WRAS

WATER REGULATIONS ADVISORY SCHEME LTD. (WRAS)
MATERIAL APPROVAL

WRAS

WATER REGULATIONS ADVISORY SCHEME LTD. (WRAS)
MATERIAL APPROVAL

CERTIFICATE

SKZ - Testing GmbH awards the following company

Polymelt GmbH
Kirnachstraße 17
87640 Ebenhofen
Germany

Production site: Polymelt GmbH, 87640 Ebenhofen

the right to use the **SKZ**-mark

A 553

for the following plastic products

Pressure pipe system
Pipes and fittings made of polypropylene PP-R
Group 1 (≤ Ø 63 mm), group 2 (≥ Ø 75 mm - 160 mm)
Application class 1 combined with design pressure 10 bar
Application class 2 combined with design pressure 8 bar

according to **SKZ**-Specification for Tests and Inspection **HR 3.10:2016-03**

Users of the **SKZ**-mark are obliged to observe the required regulations for the production and testing of these products.

Date of initial certification: 20 September 2010

Date of expiry: 1 August 2028

Würzburg, 8 August 2023

i.V.
Dipl.-Ing. Christoph Schrader
Head of Certification Body

CERTIFICATE

SKZ - Testing GmbH awards the following company

Polymelt GmbH
Kirnachstraße 17
87640 Ebenhofen
Germany

Production site: Polymelt GmbH, DE-87640 Ebenhofen

the right to use the **SKZ**-mark

A 634

for the following plastic products

Pressure pipe system, Fibre multilayer pipes made of PP-RCT/PP-R-GF/PP-RCT/PP-R-GF/PP-R and fittings made of PP-R,
Group 1 (≤ Ø 63 mm) and Group 2 (≥ Ø 75 mm – 110 mm)
Application class 1 and 2 design pressure 8 bar

Trade name: POLYMUTAN MLS / ECOSAN MLS

according to **SKZ**-Specification for Tests and Inspection **HR 3.51:2013-06.**

Users of the **SKZ**-mark are obliged to observe the required regulations for the production and testing of these products.

Date of initial certification: 13 June 2013

Date of expiry: 12 June 2028

Würzburg, 13 June 2023

i.V.
Dipl.-Ing. Hans-Peter Krause
Head of Certification Body

DVGW CERT

DVGW type examination certificate
DVGW-Baumusterprüfzertifikat

DW-8501CS0357

Field of Application	products of water supply
Owner of Certificate	POLYMELT GmbH Kirnachstraße 17, D-87640 Ebenhofen
Distributor	POLYMELT GmbH Kirnachstraße 17, D-87640 Ebenhofen
Product Category	installation systems and system joints: drinking water installation system (8501)
Product Description	drinking water installation system consisting of welding connectors made of plastic (PP-R), type S-KK and pipes made of plastic (PP-R)
Model	ECOSAN
Test Reports	type testing: 121678/16 from 17.10.2017 (SKZ) KTW testing: KR 238/16 from 18.01.2017 (TZW) hygiene testing: W-235585e-13-SI from 23.01.2013 (WHY)
Test Basis	DVGW W 534-(P) (01.07.2015) DVGW CERT ZP 8500 (09.03.2017) UBA METALLE (15.03.2017) UBA KTW (07.03.2016) DVGW W 270 (01.11.2007)
Date of Expiry / File No.	17.10.2022 / 14-0464-WNE

25.10.2017 Fb A-10

DAkkS

9.1.2 Testing institutes for product monitoring and certification

TZW Prüfstelle Wasser

SKZ Das Kunststoff-Zentrum

tgm Staatliche Versuchsanstalt

WRAS

DVGW

9.4 Sustainability

In the development of its products and their production, POLYMELT places emphasis on the sustainable, environmentally friendly and resource-conserving implementation. The raw material polypropylene PP-R can be recycled to 100 %. Any residues from the production can be reused.

Thanks to this advantage it can be processed further for the industry in many different ways. Compared to other materials, the energy expenditure required for the production of POLYMELT products is significantly lower. Furthermore, the process does not produce any environmentally hazardous substances, leading to an excellent environmental performance evaluation overall.

Advantages PP-R:
- **Can be recycled**
- **Free of halogen**
- **Free of plasticisers**
- **Hygienically safe**
- **Environmentally friendly**

NOTES

NOTES

NOTES

NOTES

NOTES

NOTES

© Copyright. All contents and graphical representations are protected by copyright and, even in altered form, they may only be reproduced, published or distributed following the express written approval of POLYMELT.

09_2024_01_ECOSAN_EN

POLYMELT GMBH
Kirnachstraße 17, 87640
Ebenhofen, Germany
Tel. +49 8342 70060
mail@polymelt.com, www.polymelt.com

POLYMELT